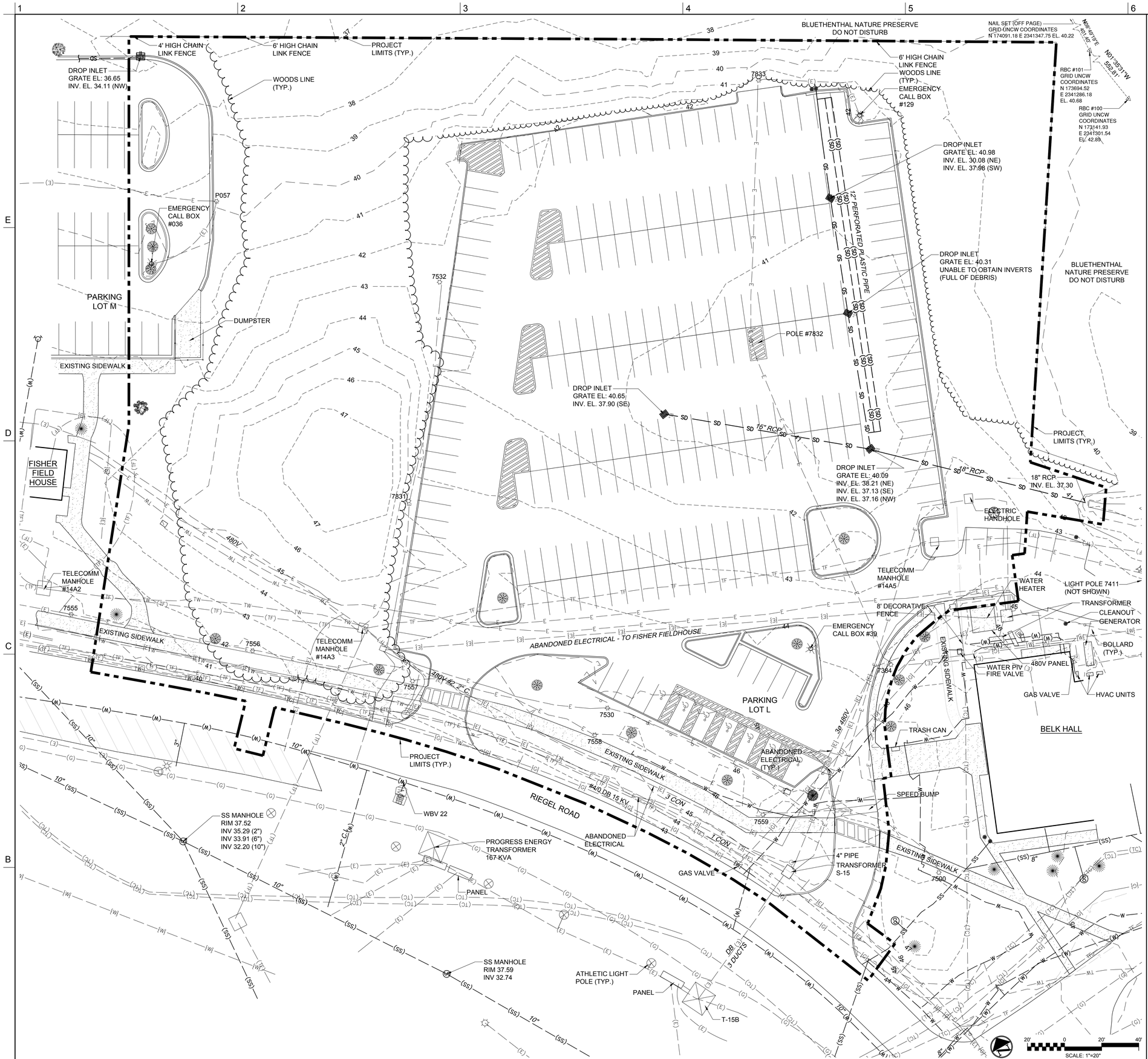

GIS LEGEND

- STORM DRAIN
- SANITARY SEWER
- WATER
- WATER ABANDONED
- UNDERGROUND ELECTRICAL
- UNDERGROUND ELECTRICAL ABANDONED
- GAS
- GAS ABANDONED
- TELECOM COPPER
- TELECOM FIBER
- TIME WARNER CABLE
- SANITARY SEWER CLEANOUT
- FDC CONNECTION
- FIRE HYDRANT
- PARKING LOT POLE LIGHT
- SIDEWALK POLE LIGHT
- BLUE LIGHT CALL BOX
- ATHLETIC FIELD POLE LIGHT
- GAS METER
- FUEL TANK
- GAS VALVE
- ATHLETIC FIELD POLE LIGHT

SURVEY LEGEND

- CENTERLINE DITCH/SWALE
- CHAIN LINK FENCE
- ORNAMENTAL FENCE
- TREE LINE
- STORM DRAIN PIPE
- WATER LINE
- SANITARY SEWER LINE
- UNDERGROUND POWER
- GAS LINE
- TELECOM FIBER
- TELECOM COPPER
- TIME WARNER CABLE
- IRRIGATION
- UTILITY DUCT BANK UNDERGROUND
- UNKNOWN UTILITY UNDERGROUND
- MAJOR CONTOUR
- MINOR CONTOUR
- TELEPHONE PEDESTAL
- FIRE HYDRANT
- WATER METER
- WATER METER
- LIGHT POLE
- POWER POLE
- GAS VALVE
- CLEANOUT
- SIGN
- DROP INLET
- CURB INLET
- CEDAR
- CHERRY
- CRAPE
- BEECH
- OAK
- MAGNOLIA
- MAPLE
- PINE
- MISC HARDWOOD

NOTES

1. EXISTING CONDITIONS PROVIDED VIA:
   - SURVEY PREPARED BY MCKIM AND CREED NOVEMBER 21, 2018
   - SURVEY PREPARED BY CAPE FEAR ENGINEERING AUGUST 03, 2017
   - CAMPUS GIS INFORMATION PREPARED BY UNCW STAFF, 03 AUGUST 2018
2. VERTICAL CONTROL BASED ON NAVD 88 (VERIFIED BY CFE). HORIZONTAL CONTROL BASED ON CONTROL MONUMENTS PROVIDED BY UNCW (NC GRID NAD 83).

UNCW
UNIVERSITY of NORTH CAROLINA WILMINGTON
601 S COLLEGE ROAD
WILMINGTON, NORTH CAROLINA 28403

PARKING DECK II AND SURFACE PARKING (DESIGN-BUILD)
SOUTH CAMPUS - 4965 RIEGEL ROAD

SCO ID NUMBER: 18-19226-01A
CODE: 441828
ITEM: 301

CONTRACTOR
Balfour Beatty Construction

DESIGNER

CLARKNEXSEN
1523 ELIZABETH AVENUE, SUITE 300
CHARLOTTE, NORTH CAROLINA 28204
704·377·8800
CLARK NEXSEN LICENSE NUMBER: C-1028

CONSULTANTS

WALKER CONSULTANTS
13860 Ballantyne Corporate Place
Suite 140
Charlotte, NC 28277
T: 704.247.6230
www.walkerconsultants.com
NC License No. F-0518

McKIM&CREED
CIVIL ENGINEER
243 NORTH FRONT STREET
WILMINGTON, NORTH CAROLINA
28401
910.343.1048

CORPORATE SEAL

PROFESSIONAL SEAL

SUBMITTAL
04/15/2019
CONSTRUCTION DOCUMENT SUBMITTAL 01

REVISIONS

KEY PLAN

SHEET
EXISTING CONDITIONS

CX100

DESIGN: TRC
DRAWN: TRC
REVIEW: RMC

8/8/2018 4:16:18 PM
S:\495900\018\0-Drawings\CX100_495900016.dwg

A | 2 | EXISTING CONDITIONS — SCALE: 1" = 20'

1 | LEGEND/NOTES — SCALE: NTS

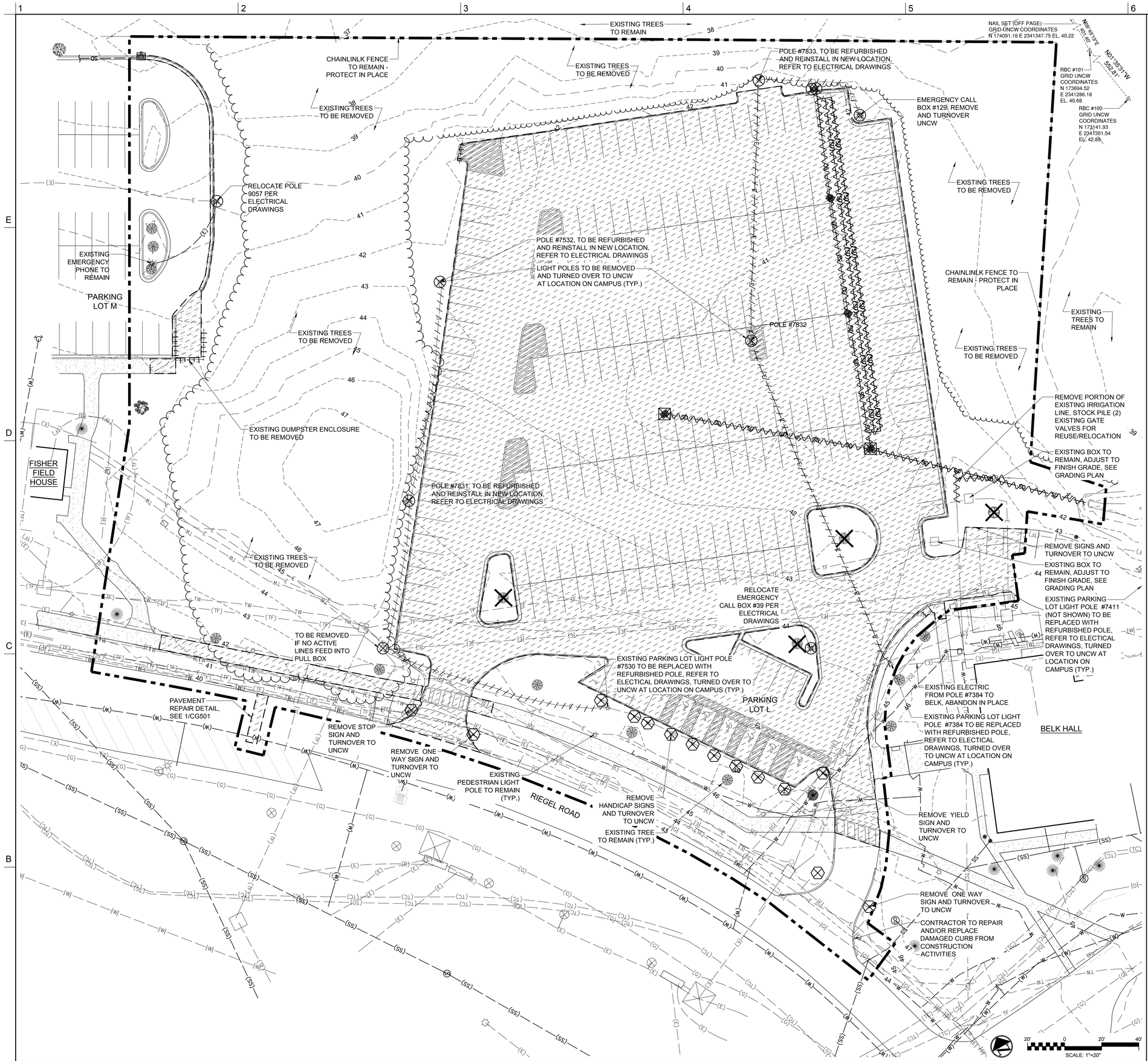

DEMO LEGEND

- HARDSCAPE TO BE REMOVED
- DRY-UTILITY TO BE REMOVED
- WET-UTILITY TO BE REMOVED
- CONSTRUCTION FENCE
- FENCE OR WALL TO BE REMOVED
- DRY-UTILITY STRUCTURE TO BE REMOVED
- WET-UTILITY STRUCTURE TO BE REMOVED
- SIGN OR OTHER MISC TO BE REMOVED
- PROTECTED TREE TO BE REMOVED

UNCW STOCKPILING OF MATERIALS:

CONTRACTOR TO STOCKPILE SITE LIGHTING POLES/FIXTURES, CALL BOXES AND SIGNS, AND RETURN TO OWNER.

NOTES

1. THE SUBGRADE PREPARATION SHOULD CONSIST OF STRIPPING ALL VEGETATION, ROOTMAT, TOPSOIL, EXISTING FILL, EXISTING FOOTING AND PAVEMENT, AND ANY OTHER SOFT OR UNSUITABLE MATERIALS FROM THE 10-FOOT EXPANDED BUILDING FOOT PRINTS AND 5-FOOT EXPANDED PAVEMENT LIMITS AND TO 5 FEET BEYOND THE TOE OF STRUCTURAL FILLS. ECS SHOULD BE CALLED ON TO VERIFY THAT TOPSOIL AND UNSUITABLE SURFICIAL MATERIALS HAVE BEEN COMPLETELY REMOVED PRIOR TO THE PLACEMENT OF STRUCTURAL FILL OR CONSTRUCTION OF THE ROADWAYS. EXISTING ABC STONE ON THE SITE CAN BE STOCKPILED FOR RE-USE. EXISTING ASPHALT GROUND DOWN TO AN ABC GRADATION AND USED IN LIFTS OF 4 INCHES BELOW THE ABC STONE AT THE SITE.
2. ALL EXISTING VEGETATION IS TO REMAIN UNLESS OTHERWISE INDICATED.
3. ALL AREAS OUTSIDE THE DISTURBED AREA IMPACTED DURING CONSTRUCTION SHALL BE RESTORED TO ITS PRE-CONSTRUCTION CONDITION OR BETTER.
4. WHERE REMOVING EXISTING UNDERGROUND ELECTRIC OR TELECOM, REMOVE CONDUCTORS AND AND CABLES BACK TO POINT OF CONNECTION TO ACTIVE CIRCUIT. UNUSED EMPTY UNDERGROUND CONDUIT MAY BE ABANDONED IN PLACE.
5. THE CONTRACTOR IS RESPONSIBLE FOR HAVING ALL EXISTING UTILITIES LOCATED PRIOR TO BEGINNING ANY DEMOLITION. CONTRACTOR SHALL CONTACT NC 811 AT LEAST 72 HOURS PRIOR TO BEGINNING CONSTRUCTION OR EXCAVATION TO HAVE EXISTING UTILITIES LOCATED. THE CONTRACTOR IS RESPONSIBLE FOR ACQUIRING A UNCW DIG PERMIT BEFORE UTILITY LOCATION.

2 DEMOLITION AND TREE REMOVAL PLAN — SCALE: 1" = 20'

1 LEGEND/NOTES — SCALE: NTS

UNCW
UNIVERSITY of NORTH CAROLINA WILMINGTON
601 S COLLEGE ROAD
WILMINGTON, NORTH CAROLINA 28403

PARKING DECK II AND SURFACE PARKING (DESIGN-BUILD)
SOUTH CAMPUS - 4965 RIEGEL ROAD

SCO ID NUMBER: 18-19226-01A
CODE: 441828
ITEM: 301

CONTRACTOR
Balfour Beatty Construction

DESIGNER

CLARKNEXSEN
1523 ELIZABETH AVENUE, SUITE 300
CHARLOTTE, NORTH CAROLINA 28204
704·377·8800
CLARK NEXSEN LICENSE NUMBER: C-1028

CONSULTANTS

WALKER CONSULTANTS
13860 Ballantyne Corporate Place
Suite 140
Charlotte, NC 28277
T: 704.247.6230
www.walkerconsultants.com
NC License No. F-0518

McKIM&CREED
CIVIL ENGINEER
243 NORTH FRONT STREET
WILMINGTON, NORTH CAROLINA
28401
910.343.1048

CORPORATE SEAL

PROFESSIONAL SEAL
NOT FOR CONSTRUCTION
NORTH CAROLINA PROFESSIONAL ENGINEER SEAL 22975 RICHARD M. COLLINSON

SUBMITTAL
04/15/2019
CONSTRUCTION DOCUMENT SUBMITTAL 01

REVISIONS

KEY PLAN

SHEET
DEMOLITION AND TREE REMOVAL PLAN

CD100

DESIGN: TRC
DRAWN: TRC
REVIEW: RMC

8/8/2018 4:16:18 PM
S:\4999\00016\BD-Drawings\CD100_49990016.dwg

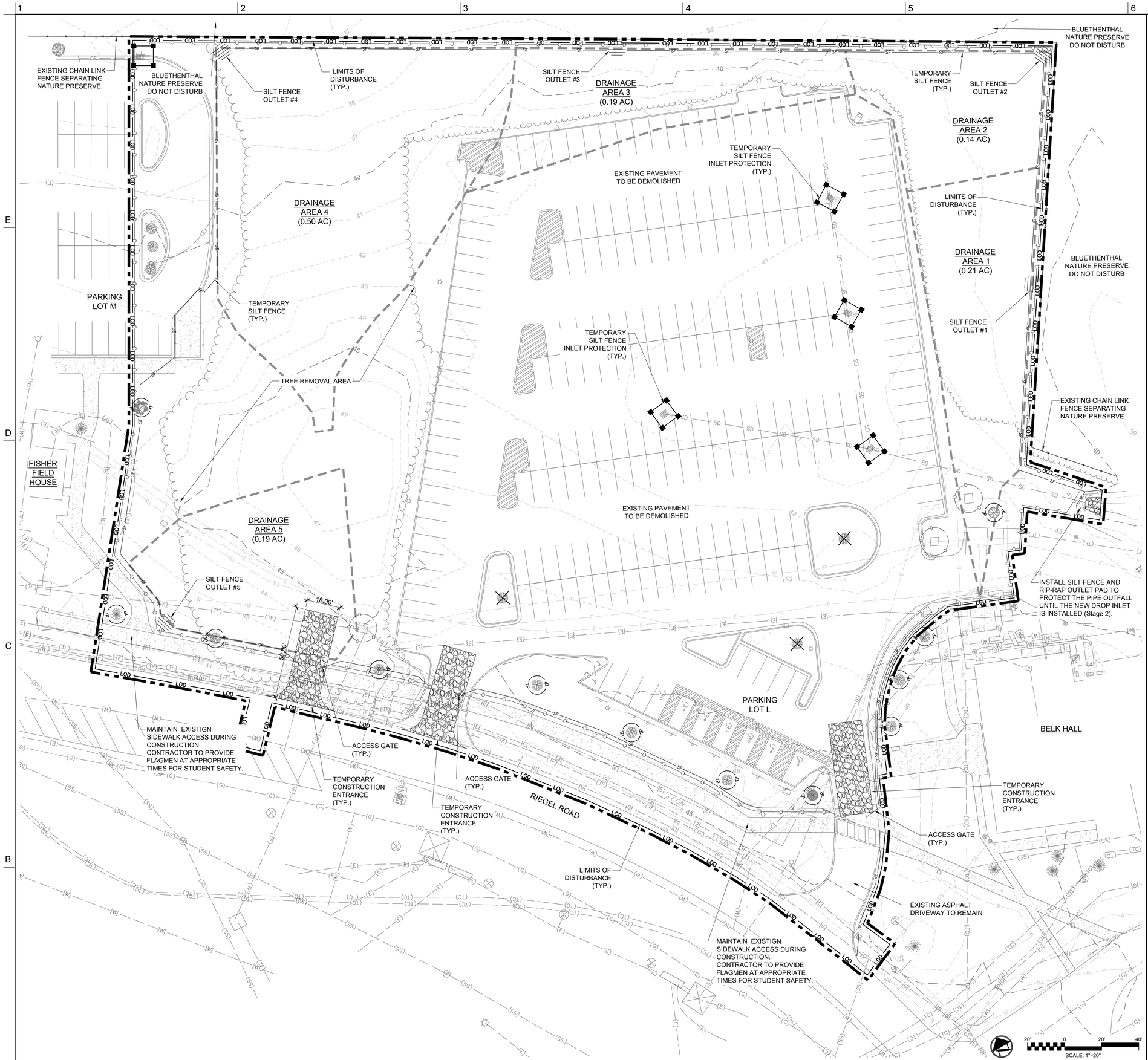

EROSION CONTROL LEGEND

- LOD — LIMITS OF DISTURBANCE
- SF — SECURITY FENCE
- SF — SILT FENCE
- TP — TREE PROTECTION FENCE
- TDD — TEMPORARY DIVERSION DIKE
- 40 — EXISTING MAJOR CONTOUR
- 39 — EXISTING MINOR CONTOUR
- INLET PROTECTION
- SILT FENCE OUTLET
- CONSTRUCTION ENTRANCE
- TREES TO REMOVE

EXISTING TREE LEGEND

- CEDAR
- CHERRY
- CRAPE
- BEECH
- OAK
- MAGNOLIA
- MAPLE
- PINE
- MISC HARDWOOD

GENERAL NOTE:

ALL AREAS OUTSIDE THE DISTURBED AREA THAT MAY BE IMPACTED DURING CONSTRUCTION SHOULD HAVE GRASS, SIDEWALK, AND OTHER ITEMS RESTORED TO LIKE CONSTRUCTION.

CONSTRUCTION SEQUENCE

1. REMOVE EXISTING CURBING, CONCRETE, AND ASPHALT REQUIRED TO INSTALL TEMPORARY CONSTRUCTION ENTRANCES. INSTALL CONSTRUCTION ENTRANCES, SILT FENCING, AND SECURITY FENCING.
2. CLEAR/DEMOLISH MINIMUM AMOUNT OF EXISTING VEGETATION AND INFRASTRUCTURE NECESSARY FOR INSTALLATION OF TEMPORARY EROSION CONTROL MEASURES.
3. INSTALL INLET PROTECTION AROUND EXISTING INLETS WITHIN THE LOD AND MAINTAIN THEM UNTIL THEY AND THE EXISTING STORMWATER PIPES ARE REMOVED.
4. BEGIN DEMOLITION OF EXISTING INFRASTRUCTURE WITHIN THE LIMITS OF DISTURBANCE.
5. WHEN REMOVING EXISTING STORM DRAINS WORK FROM DOWNSTREAM TO UPSTREAM, REMOVING PIPES, INLETS AND INLET PROTECTION.
6. WHERE PARKING LOTS ARE BEING DEMOLISHED, BEGIN PAVEMENT REMOVAL ON THE HIGH SIDE OF THE PARKING AREA WORKING TOWARDS INLET PROTECTION DEVICES. STABILIZE AREA OF PAVEMENT REMOVAL IN ACCORDANCE WITH SEEDING SPECIFICATIONS PRIOR TO REMOVAL OF INLET PROTECTION.
7. CONTRACTOR TO MAINTAIN E/C MEASURES PER NCDEQ RULES AND REGULATIONS.
8. EXISTING STUDENT WALKWAYS ALONG RIEGEL ROAD SHALL BE MAINTAINED THROUGHOUT CONSTRUCTION TO ALLOW STUDENT CIRCULATION. CONTRACTOR TO REPAIR ANY PORTIONS OF WALKWAY DAMAGED FROM CONSTRUCTION ACTIVITIES.
9. CONTRACTOR IS PERMITTED TO RELOCATE CONSTRUCTION FENCING ACCORDING TO THEIR CONSTRUCTION SEQUENCE, AND BY REQUESTS OR REQUIREMENTS BY UNCW. EROSION CONTROL MEASURES MUST BE IN PLACE AND OPERATIONAL.

SITE DATA AND CALCULATIONS:

SITE COORDINATES

LAT: 34°13'22.15"N
LONG: 77°52'18.64"W

DISTURBED AREA

TOTAL DISTURBED AREA = 4.45 AC.(193,842 SF)

STAGE 1 SILT FENCE				
SILT FENCE OUTLET NO.	DRAINAGE AREA	LENGTH	ACRE	0.25 ACRE PER 100 FT
	(ACRES)	(FT)	(PER 100 FT)	(YES/NO)
SFO #1	0.21	152	0.14	YES
SFO #2	0.14	158	0.09	YES
SFO #3	0.19	167	0.12	YES
SFO #4	0.50	271	0.18	YES
SFO #5	0.19	121	0.16	YES

UNCW
UNIVERSITY of NORTH CAROLINA WILMINGTON
601 S COLLEGE ROAD
WILMINGTON, NORTH CAROLINA 28403

PARKING DECK II AND SURFACE PARKING (DESIGN-BUILD)
SOUTH CAMPUS - 4965 RIEGEL ROAD

SCO ID NUMBER: 18-19226-01A
CODE: 441828
ITEM: 301

CONTRACTOR
Balfour Beatty Construction

DESIGNER

CLARKNEXSEN
1523 ELIZABETH AVENUE, SUITE 300
CHARLOTTE, NORTH CAROLINA 28204
704·377·8800
CLARK NEXSEN LICENSE NUMBER: C-1028

CONSULTANTS

WALKER CONSULTANTS
13860 Ballantyne Corporate Place
Suite 140
Charlotte, NC 28277
T: 704.247.6230
www.walkerconsultants.com
NC License No. F-0518

McKIM&CREED
CIVIL ENGINEER
243 NORTH FRONT STREET
WILMINGTON, NORTH CAROLINA
28401
910.343.1048

CORPORATE SEAL

PROFESSIONAL SEAL
NOT FOR CONSTRUCTION
NORTH CAROLINA PROFESSIONAL SEAL 22915 ENGINEER EDWARD M. COLLINS

SUBMITTAL
04/15/2019
CONSTRUCTION DOCUMENT SUBMITTAL 01

REVISIONS

KEY PLAN

SHEET
EROSION CONTROL - STAGE 1

CE101

DESIGN: TRC
DRAWN: TRC
REVIEW: RMC

8/9/2018 4:16:18 PM
S:\49990016\80-Drawings\CE101_49990016.dwg

A 2 EROSION CONTROL - STAGE 1 SCALE: 1" = 20'

1 LEGEND/NOTES SCALE: NTS

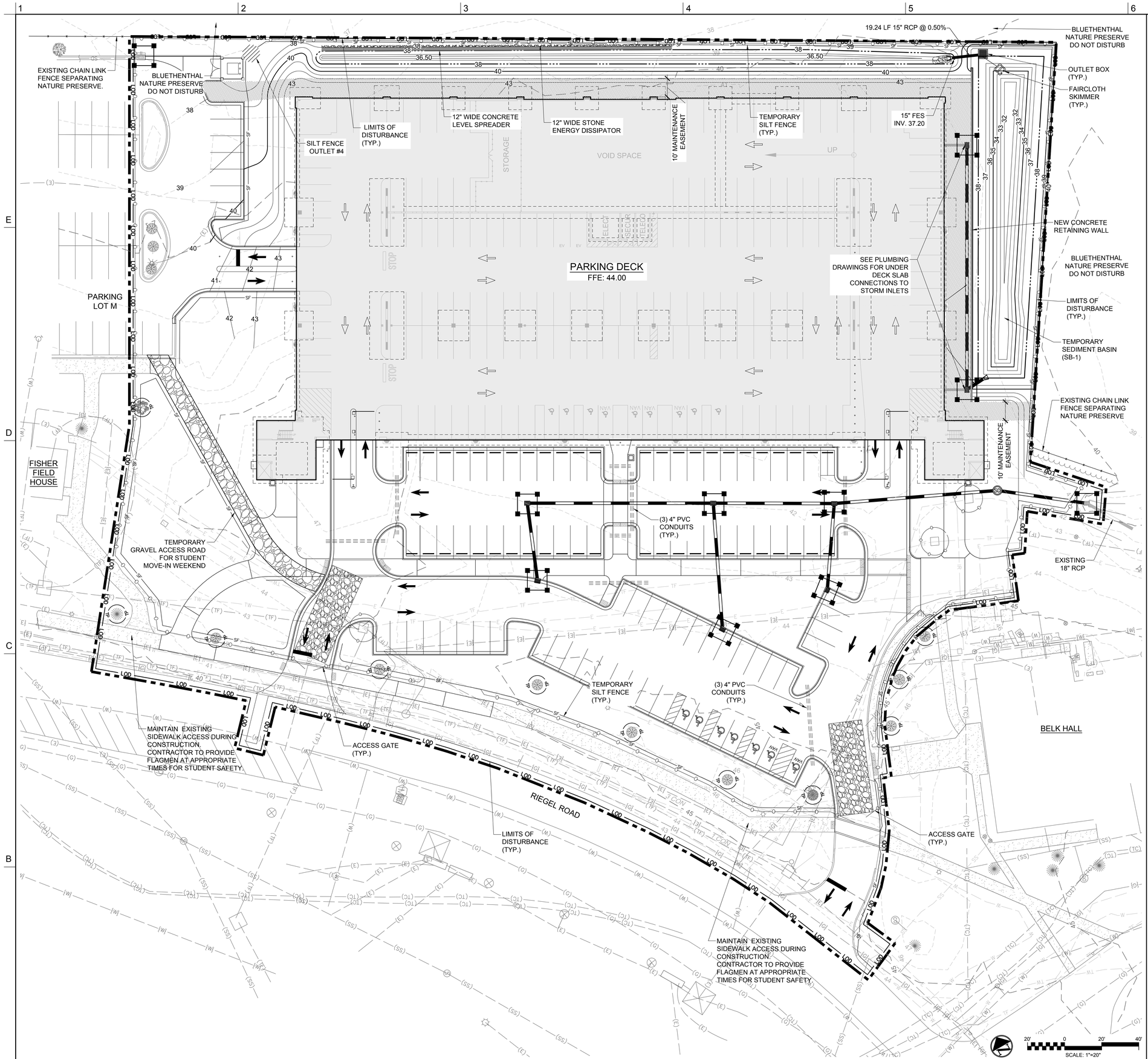

EROSION CONTROL LEGEND

- LOD — LIMITS OF DISTURBANCE
- SECURITY FENCE
- SF — SILT FENCE
- TP — TREE PROTECTION FENCE
- TDD — TEMPORARY DIVERSION DIKE
- 40 — EXISTING MAJOR CONTOUR
- 39 — EXISTING MINOR CONTOUR
- INLET PROTECTION
- SILT FENCE OUTLET
- CONSTRUCTION ENTRANCE
- SEDIMENT BASIN WITH FAIRCLOTH SKIMMER

EXISTING TREE LEGEND

- CEDAR
- CHERRY
- CRAPE
- BEECH
- OAK
- MAGNOLIA
- MAPLE
- PINE
- MISC HARDWOOD

GENERAL NOTE:

ALL AREAS OUTSIDE THE DISTURBED AREA THAT MAY BE IMPACTED DURING CONSTRUCTION SHOULD HAVE GRASS, SIDEWALK, AND OTHER ITEMS RESTORED TO LIKE CONSTRUCTION.

CONSTRUCTION SEQUENCE

1. BEGIN DEMOLITION OF EXISTING PARKING LOT AND INFRASTRUCTURE AS SHOWN ON THE DEMOLITION PLAN. PAVEMENT REMOVAL SHOULD PROGRESS FROM HIGH SIDE OF THE PARKING AREA WORKING TOWARDS INLET PROTECTION DEVICES.
2. WHEN REMOVING EXISTING STORM DRAINS WORK FROM DOWNSTREAM TO UPSTREAM, REMOVING PIPES, INLETS AND INLET PROTECTION.
3. CONTRACTOR TO MAINTAIN E/C MEASURES PER NCDEQ RULES AND REGULATIONS.
4. PROVIDE INLET PROTECTION FOR ALL NEW INLETS IMMEDIATELY FOLLOWING INSTALLATION.
5. EXISTING STUDENT WALKWAYS ALONG RIEGEL ROAD SHALL BE MAINTAINED THROUGHOUT CONSTRUCTION TO ALLOW STUDENT CIRCULATION. CONTRACTOR TO REPAIR ANY PORTIONS OF WALKWAY DAMAGED FROM CONSTRUCTION ACTIVITIES.
6. CONTRACTOR IS PERMITTED TO RELOCATE CONSTRUCTION FENCING ACCORDING TO THEIR CONSTRUCTION SEQUENCE, AND BY REQUESTS OR REQUIREMENTS BY UNCW. EROSION CONTROL MEASURES MUST BE IN PLACE AND OPERATIONAL.
7. EXCAVATE SCM-1 AND LS-1.
8. INSTALL RETAINING WALL AND STORM DRAINAGE SYSTEM.
9. INSTALL 185 LF CONCRETE LEVEL SPREADER WITH #57 STONE ENERGY DISSIPATOR THAT IS 12-INCHES WIDE BY 6-INCHES DEEP DOWNSTREAM OF THE LEVEL SPREADER LIP.

SITE DATA AND CALCULATIONS:

SITE COORDINATES

LAT: 34°13'22.15"N
LONG: 77°52'18.64"W

DISTURBED AREA

TOTAL DISTURBED AREA = 4.45 AC.(193,842 SF)

TEMPORARY SEDIMENT BASIN (SB-1)

DA = 1.52 AC (66,193 SF)

LEVEL SPREADER (LS-1)

LS-1 (SEE DETAIL ON CG-503)

Q_{10} = 5.695 CFS X 10 LF
= 57 LF (REQ'D)
= 189 LF (PROVIDED)

STAGE 2 SILT FENCE				
SILT FENCE OUTLET NO.	DRAINAGE AREA	LENGTH	ACRE	0.25 ACRE PER 100 FT
	(ACRES)	(FT)	(PER 100 FT)	(YES/NO)
SFO #4	0.06	102	0.06	YES

2 EROSION CONTROL - STAGE 2 SCALE: 1" = 20'

1 LEGEND/NOTES SCALE: NTS

UNCW
UNIVERSITY of NORTH CAROLINA WILMINGTON
601 S COLLEGE ROAD
WILMINGTON, NORTH CAROLINA 28403

PARKING DECK II AND SURFACE PARKING (DESIGN-BUILD)
SOUTH CAMPUS - 4965 RIEGEL ROAD

SCO ID NUMBER: 18-19226-01A
CODE: 441828
ITEM: 301

CONTRACTOR
Balfour Beatty Construction

DESIGNER
CLARKNEXSEN
1523 ELIZABETH AVENUE, SUITE 300
CHARLOTTE, NORTH CAROLINA 28204
704·377·8800
CLARK NEXSEN LICENSE NUMBER: C-1028

CONSULTANTS
WALKER CONSULTANTS
13860 Ballantyne Corporate Place
Suite 140
Charlotte, NC 28277
T: 704.247.6230
www.walkerconsultants.com
NC License No. F-0518

McKIM&CREED
CIVIL ENGINEER
243 NORTH FRONT STREET
WILMINGTON, NORTH CAROLINA
28401
910.343.1048

CORPORATE SEAL

PROFESSIONAL SEAL
NORTH CAROLINA PROFESSIONAL ENGINEER SEAL 22913 RICHARD M. COLLINS
NOT FOR CONSTRUCTION

SUBMITTAL
04/15/2019
CONSTRUCTION DOCUMENT SUBMITTAL 01

REVISIONS

KEY PLAN

SHEET
EROSION CONTROL - STAGE 2

CE102

DESIGN: TRC
DRAWN: TRC
REVIEW: RMC

8/9/2018 4:16:18 PM
S:\49990016\90-Drawings\CE102_49990016.dwg

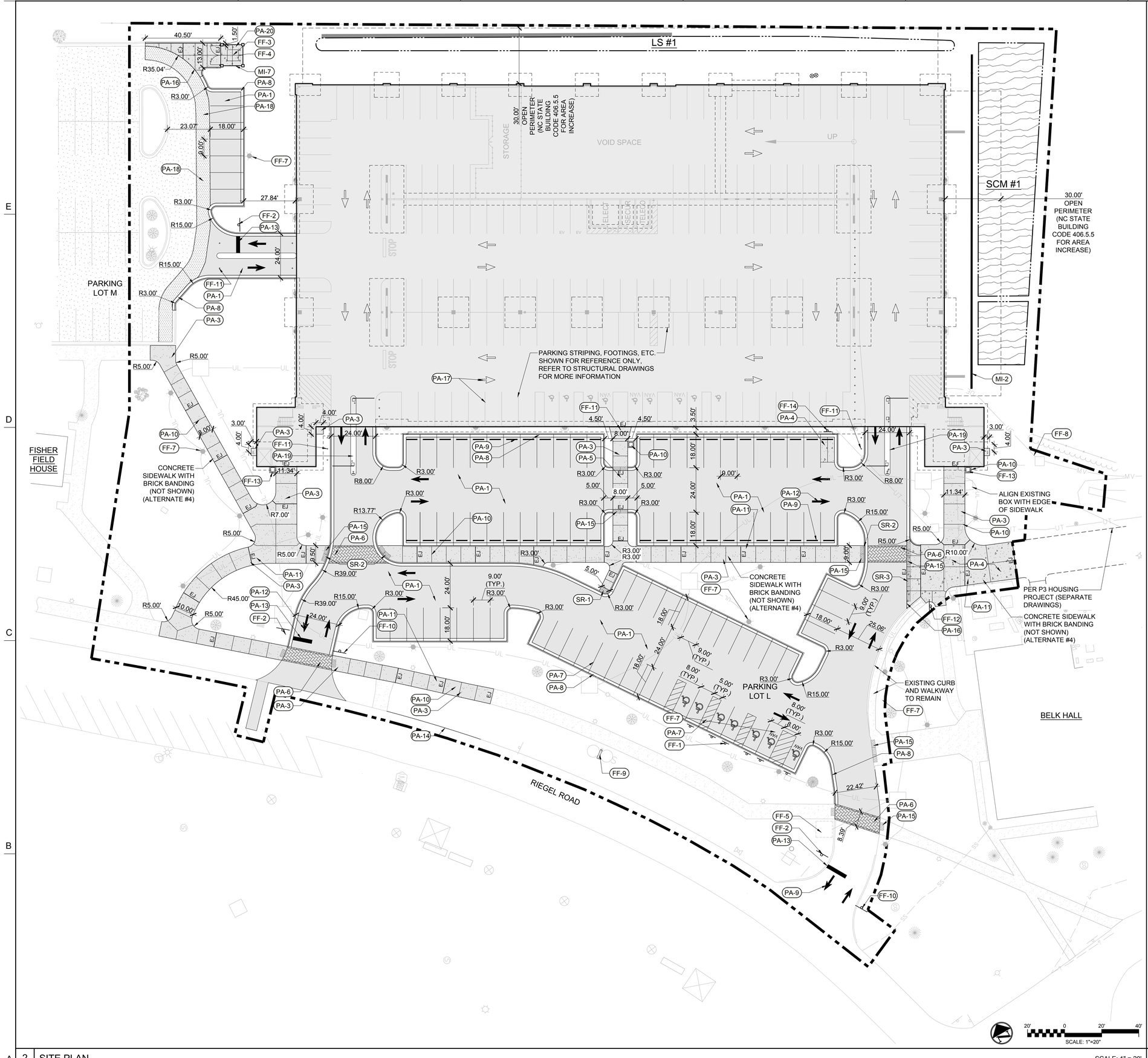

KEY NOTES LEGEND

PAVEMENTS AND CURBING		
KEY CODE	DESCRIPTION	DETAIL REFERENCE
PA-1	ASPHALT PAVEMENT	1/CS502
PA-2	NOTE NOTE USED	-
PA-3	CONCRETE PAVEMENT - TYPE 1	3/CS502
PA-4	CONCRETE PAVEMENT - TYPE 2	3/CS502
PA-5	RAISED CONCRETE CROSSWALK	1/CS503
PA-6	IMPRINTED ASPHALT CROSSWALK	8/CS502
PA-7	STANDARD & ACCESSIBLE PARKING SPACE LAYOUT (TYP.)	6/CS502
PA-8	CURB AND GUTTER (TYP.)	3/CS501
PA-9	WHEEL STOP (TYP.)	4/CS502
PA-10	CONTROL JOINT (TYP.)	1/CS501
PA-11	EXPANSION JOINT (TYP.)	1/CS501
PA-12	DIRECTIONAL ARROW PAVEMENT MARKING (TYP.)	7/CS502
PA-13	STOP BAR PAVEMENT MARKING (TYP.)	7/CS502
PA-14	NEW SAW-CUT PAVEMENT EDGE	
PA-15	TRUNCATED DOME WARNING MATS (TYP.)	2/4/5/CS501
PA-16	CONCRETE TO ASPHALT TRANSITION	2/CS502
PA-17	STRIPING/PAVEMENT MARKINGS WITHIN DECK	SEE STRUCT.
PA-18	MILL AND OVERLAY EXISTING ASPHALT PAVING	
PA-19	ISLAND CURB	5/CS503
PA-20	DUMPSTER PAD	2/S-401

STAIRS AND RAMPS		
KEY CODE	DESCRIPTION	DETAIL REFERENCE
SR-1	DEPRESSED CURB - TYPE 1	5/CS501
SR-2	DEPRESSED CURB - TYPE 2	4/CS501
SR-3	DEPRESSED CURB - TYPE 3	2/CS501

FURNITURE, FIXTURES AND EQUIPMENT		
KEY CODE	DESCRIPTION	DETAIL REFERENCE
FF-1	HANDICAP SIGNAGE (TYP.)	5/CS502
FF-2	STOP SIGN (TYP.)	9/CS502
FF-3	DUMPSTER (TYP.)	BY UNCW
FF-4	BOLLARD (TYP.)	8/S-550
FF-5	RELOCATED CALL BOX	PER ELECT.
FF-6	NOTE NOT USED	
FF-7	REFURBISHED LIGHT FIXTURE (TYP.)	PER ELECT.
FF-8	TRANSFORMER	PER ELECT.
FF-9	PER LEVEL SPACE AVAILABILITY SIGNAGE	AG401
FF-10	PERMIT ONLY SIGN	BY UNCW
FF-11	BOLLARD (TYP.)	AG401
FF-12	EMERGENCY AND AUTHORIZED VEHICLES ONLY SIGN	9/CS502
FF-13	TRASH RECEPTACLE	6/CS501
FF-14	MOTORCYCLE PARKING SIGN	9/CS502

MISCELLANEOUS		
MI-1	DUMPSTER ENCLOSURE SCREEN FENCE	2/3/5/6/CS503 & 2/S-401
MI-2	CIP RETAINING WALL	4/6/CS503

ALTERNATE NO. 1A: PAINT / STAIN DECK UNDERSIDE WITH A WHITE FINISH WITH 1-YEAR WARRANTY. PAINT ALL SPRINKLER AND STORM PIPING (INCLUDES VERTICAL, HORIZONTAL AND DIAGONAL PIPES).

ALTERNATE NO. 1B: PAINT / STAIN VERTICAL SURFACES WITH A WHITE FINISH WITH 1-YEAR WARRANTY.

ALTERNATE NO. 2: PROVIDE ALUMINUM NON-GLAZED FRAMES AT OPENINGS INDICATED IN THE ARCHITECTURAL DRAWINGS. ALL STAIR WINDOWS AND FRAMES TO REMAIN IN BASE BID.

ALTERNATE NO. 3A: ADD DOMESTIC WATER SOURCE FROM THE SOUTHWEST SITE NEW FIRE HYDRANT TO THE WEST SIDE OF THE DECK WITH A 2" REDUCED PRESSURE BACKFLOW PREVENTER, HOTBOX, DOMESTIC WATER BOOSTER PUMP AND 2" DOMESTIC WATER MAIN STUBBED INTO THE DECK.

ALTERNATE NO. 3B: PROVIDE 2" PIPING AND TWO (2) HOSE CONNECTIONS ON LEVELS 1 THROUGH 5 AT EACH END OF RAMP.

ALTERNATE NO. 4: PROVIDE BRICK EDGE BANDING AT NEW SIDEWALKS AS INDICATED ON THE CIVIL PLANS.

ALTERNATE NO. 5: PROVIDE 304 STAINLESS STEEL STAIR RAILINGS IN LIEU OF HOT DIPPED GALVANIZED.

UNCW
UNIVERSITY of NORTH CAROLINA WILMINGTON
601 S COLLEGE ROAD
WILMINGTON, NORTH CAROLINA 28403

PARKING DECK II AND SURFACE PARKING (DESIGN-BUILD)
SOUTH CAMPUS - 4965 RIEGEL ROAD

SCO ID NUMBER: 18-19226-01A
CODE: 441828
ITEM: 301

CONTRACTOR
Balfour Beatty Construction

DESIGNER

CLARKNEXSEN
1523 ELIZABETH AVENUE, SUITE 300
CHARLOTTE, NORTH CAROLINA 28204
704·377·8800
CLARK NEXSEN LICENSE NUMBER: C-1028

CONSULTANTS

WALKER CONSULTANTS
13860 Ballantyne Corporate Place
Suite 140
Charlotte, NC 28277
T: 704.247.6230
www.walkerconsultants.com
NC License No. F-0518

McKIM&CREED
CIVIL ENGINEER
243 NORTH FRONT STREET
WILMINGTON, NORTH CAROLINA
28401
910.343.1048

CORPORATE SEAL

PROFESSIONAL SEAL

SUBMITTAL
04/15/2019
CONSTRUCTION DOCUMENT SUBMITTAL 01

REVISIONS

KEY PLAN

SHEET
SITE PLAN

CS100

DESIGN: TRC
DRAWN: TRC
REVIEW: RMC

2 SITE PLAN — SCALE: 1" = 20'

1 LEGEND/NOTES — SCALE: NTS

8/9/2018 4:16:18 PM
S:\49990016\BIC\Drawings\CS100_49990016.dwg

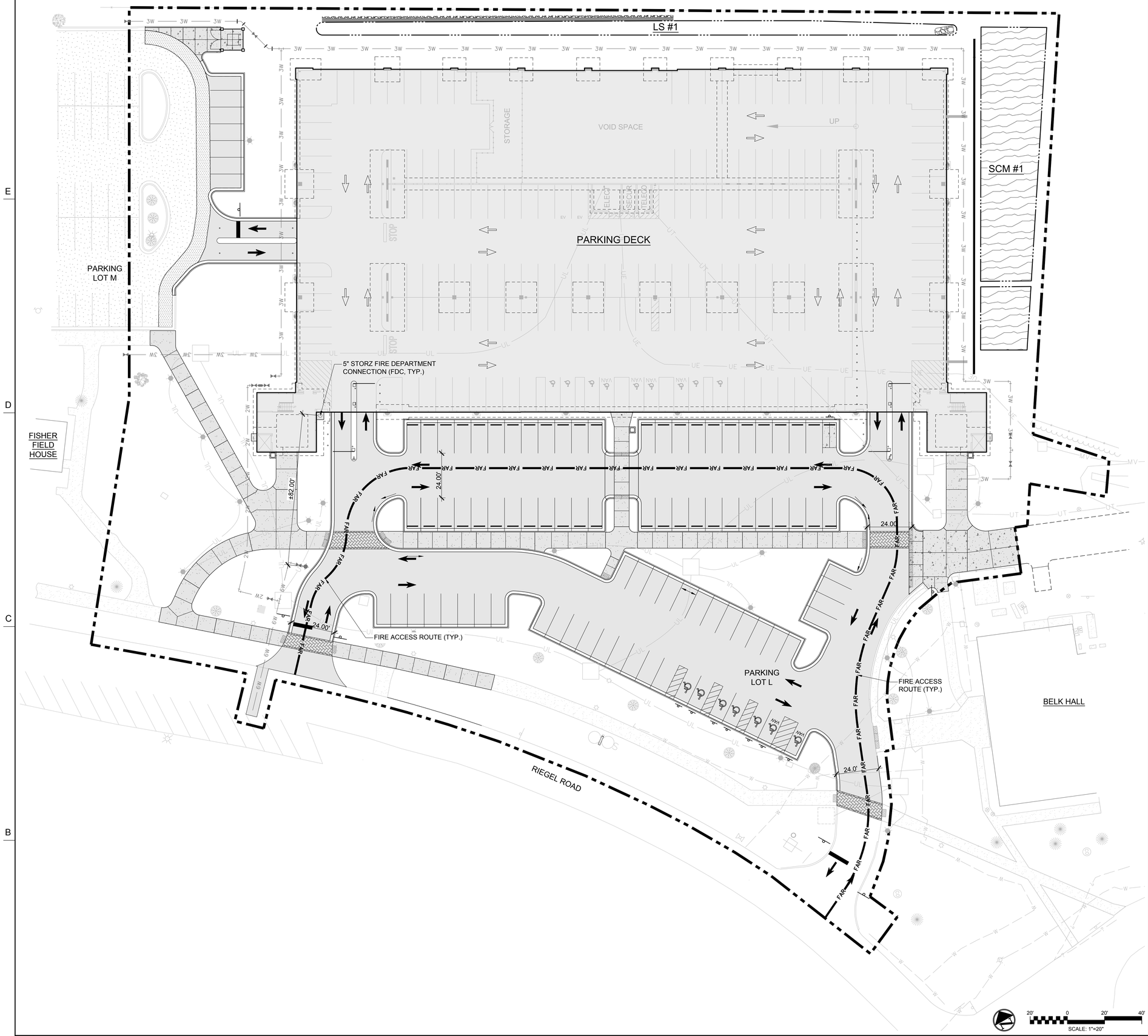

LEGEND

FAR FAR FIRE ACCESS ROUTE

FIRE FLOW TEST

FIRE HYDRANT FLOW TESTS WERE CONDUCTED ON JANUARY 1, 2019.

- THE FLOW HYDRANT (WH 0037) IS LOCATED ALONG RIEGEL ROAD IN FRONT OF HERBERT FISHER FIELD HOUSE
- THE RESIDUAL HYDRANT (WH 0074) IS LOCATED SOUTH OF BELK ALONG RIEGEL ROAD
- FLOW = 1110GPM @ 44 PSI
- STATIC PRESSURE = 58 PSI
- RESIDUAL PRESSURE = 49 PSI

UNCW
UNIVERSITY of NORTH CAROLINA WILMINGTON
601 S COLLEGE ROAD
WILMINGTON, NORTH CAROLINA 28403

PARKING DECK II AND SURFACE PARKING (DESIGN-BUILD)
SOUTH CAMPUS - 4965 RIEGEL ROAD

SCO ID NUMBER: 18-19226-01A
CODE: 441828
ITEM: 301

CONTRACTOR
Balfour Beatty Construction

DESIGNER
CLARKNEXSEN
1523 ELIZABETH AVENUE, SUITE 300
CHARLOTTE, NORTH CAROLINA 28204
704·377·8800

CLARK NEXSEN LICENSE NUMBER: C-1028

CONSULTANTS
WALKER CONSULTANTS
13860 Ballantyne Corporate Place
Suite 140
Charlotte, NC 28277
T: 704.247.6230
www.walkerconsultants.com
NC License No. F-0518

McKIM&CREED
CIVIL ENGINEER
243 NORTH FRONT STREET
WILMINGTON, NORTH CAROLINA
28401
910.343.1048

CORPORATE SEAL

PROFESSIONAL SEAL
NOT FOR CONSTRUCTION

SUBMITTAL
04/15/2019
CONSTRUCTION DOCUMENT SUBMITTAL 01

REVISIONS

KEY PLAN

SHEET
FIRE PROTECTION SITE PLAN

CF100

DESIGN: TRC
DRAWN: TRC
REVIEW: RMC

8/8/2018 4:16:18 PM
S:\499900\018\0-Drawings\CF100_499900016.dwg

A 2 FIRE PROTECTION SITE PLAN SCALE: 1" = 20'

1 LEGEND/NOTES SCALE: NTS

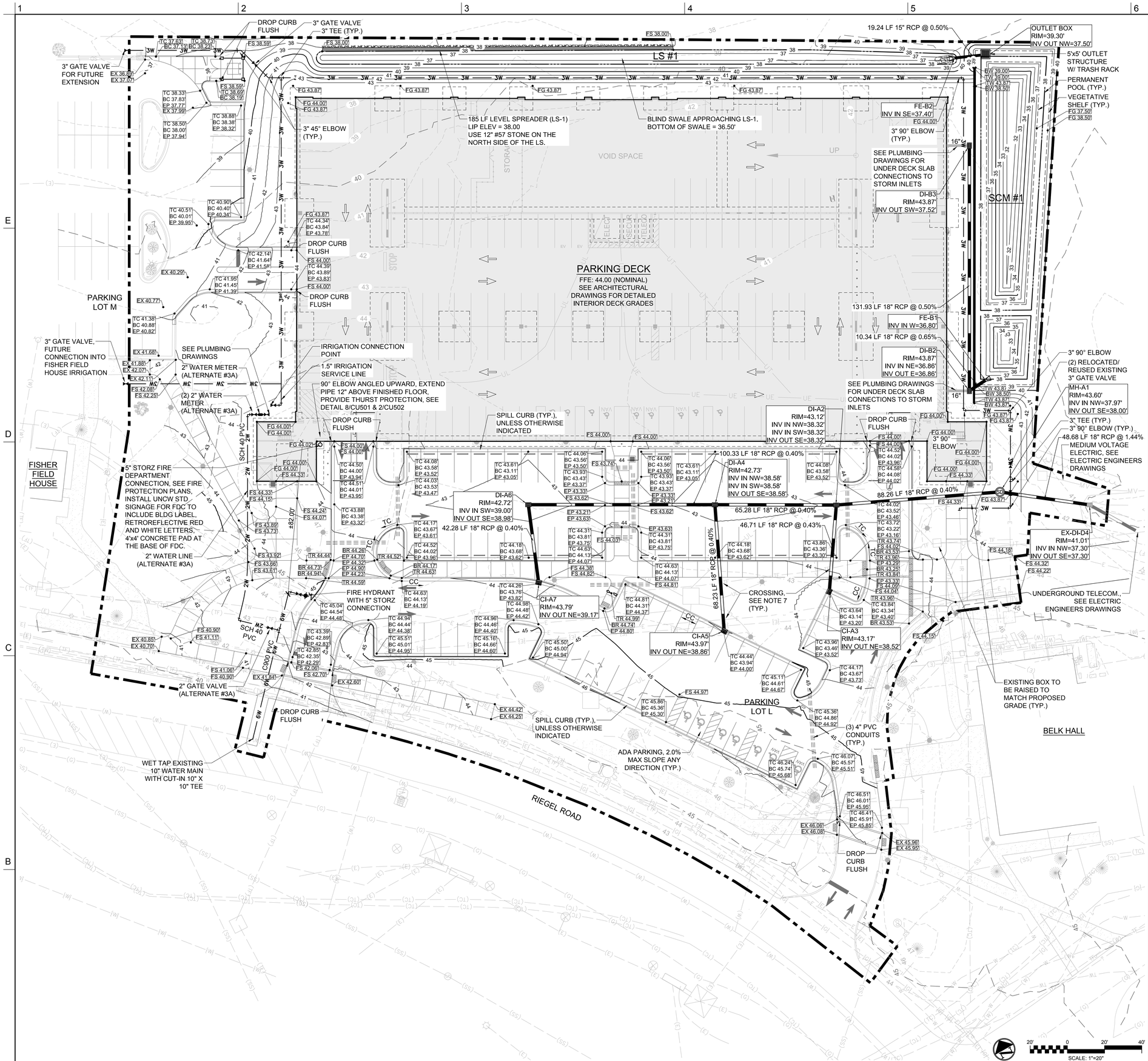

STORM DRAINAGE LEGEND

- STORM DRAIN LINE
- STORM DRAIN CURB INLET
- STORM DRAIN DROP INLET
- STORM DRAIN MANHOLE/ JUNCTION BOX
- FLARED END SECTION

GRADING LEGEND

- 39 — MINOR CONTOURS
- 40 — MAJOR CONTOURS
- EP 37.34' — SPOT GRADE
- BW — BOTTOM OF WALL
- TW — TOP OF WALL
- BS — BOTTOM OF STEP
- TS — TOP OF STEP
- BC — BOTTOM OF CURB
- TC — TOP OF CURB
- BR — BOTTOM OF RAMP
- TR — TOP OF RAMP
- FG — FINISHED GRADE
- FS — FINISHED SURFACE
- EP — EDGE OF PAVEMENT
- EX — EXISTING GRADE
- CC — CATCH CURB
- SC — SPILL CURB
- TC — TRANSITION CURB

WATER LEGEND

- 6W — WATER LINE
- FIRE HYDRANT
- FIRE DEPARTMENT CONNECTION
- WATER VALVE
- WATER METER
- WATER CROSSING
- WATER ELBOW
- WATER PLUG
- WATER TEE
- IRRIGATION BACKFLOW PREVENTER

UTILITY NOTES:

1. SITE UTILITY CONTRACTOR TO PROVIDE WATER SERVICE TO WITHIN 5 FEET OF THE BUILDING. CONTRACTOR SHALL COORDINATE SITE PLAN CONNECTIONS WITH THE ARCHITECTURAL BUILDING AND PLUMBING PLANS.
2. ALL UNDERGROUND PIPING AND UTILITIES (BOTH METALLIC AND NON-METALLIC), EXCEPT LAWN IRRIGATION LINES, SHALL HAVE PRINTED DURABLE PLASTIC WARNING TAPES IDENTIFYING BURIED PIPE BELOW. IN ADDITION, THE NON-METALLIC PIPES (PE, PVC, CP) SHALL BE IDENTIFIED BY MAGNETIC TYPE METHODS SUCH AS DETECTABLE TAPE OR TRACER WIRE.

STORM DRAINAGE AND GRADING NOTES:

1. IN ACCORDANCE WITH NC GENERAL STATUTES, NPDES REGULATIONS, AND NCDEQ REQUIREMENTS, STORMWATER DISCHARGE OUTFALLS SHALL BE INSPECTED BY THE CONTRACTOR. INSPECTIONS SHALL BE PERFORMED BY THE CONTRACTOR AFTER EACH STORM EVENT OF 1/2 INCH OR GREATER, WITH ONE WEEKLY INSPECTION MINIMUM. NCDENQ STANDARD INSPECTION REPORTS SHALL BE PREPARED AND SIGNED WITH COPIES PROVIDED TO THE OWNER, ARCHITECT, AND ENGINEER, BY THE CONTRACTOR.
2. INLET PROTECTION SHALL BE INSTALLED AROUND OUTFALL. DEVICES SHALL BE CONSTRUCTED TO FINAL PROPOSED CONDITION UPON STABILIZATION OF CONTRIBUTING GROUND SURFACES AND REMOVAL OF SEDIMENT FROM STORM PIPES.
3. SEDIMENT/EROSION DEVICES SHALL BE CHECKED BY THE CONTRACTOR DAILY. EACH DEVICE IS TO BE MAINTAINED OR REPLACED IF SEDIMENT ACCUMULATION HAS REACHED ONE HALF THE CAPACITY OF THE DEVICE.
4. ALL DIMENSIONS AND GRADES SHOWN ON THE PLANS SHALL BE FIELD VERIFIED BY THE CONTRACTOR PRIOR TO CONSTRUCTION. CONTRACTOR SHALL NOTIFY CONSTRUCTION MANAGER IF ANY DISCREPANCIES EXIST PRIOR TO PROCEEDING WITH CONSTRUCTION FOR NECESSARY PLAN OR GRADE CHANGES. NO EXTRA COMPENSATION SHALL BE PAID TO CONTRACTOR FOR ANY WORK DONE DUE TO DIMENSIONS OR GRADES SHOWN INCORRECTLY ON THESE PLANS IF SUCH NOTIFICATION HAS NOT BEEN GIVEN.
5. UNLESS OTHERWISE NOTED, GRADES AND SPOT ELEVATIONS NOTED ON PLANS INDICATE FINISHED GRADE OR PAVEMENT SURFACE. ALL DIMENSIONS ARE MEASURED TO THE BACK OF CURB UNLESS OTHERWISE INDICATED.
6. ALL AREAS TO BE GRADED SO THAT NO AREAS OF STANDING WATER OCCUR.
7. PROPOSED STORM WATER CROSSINGS WITH EXISTING TELECOMMUNICATIONS DUCT BANK AND ELECTRIC LINES WITH LESS THAN 12" SEPARATION SHALL BE ENCASED WITH FLOWABLE FILL CONCRETE WITH 6" THICK MINIMUM WALL THICKNESS.

2 GRADING, DRAINAGE AND UTILITY PLAN — SCALE: 1" = 20'

1 LEGEND/NOTES — SCALE: NTS

UNCW
UNIVERSITY of NORTH CAROLINA WILMINGTON
601 S COLLEGE ROAD
WILMINGTON, NORTH CAROLINA 28403

PARKING DECK II AND SURFACE PARKING (DESIGN-BUILD)
SOUTH CAMPUS - 4965 RIEGEL ROAD

SCO ID NUMBER: 18-19226-01A
CODE: 441828
ITEM: 301

CONTRACTOR
Balfour Beatty Construction

DESIGNER

CLARKNEXSEN
1523 ELIZABETH AVENUE, SUITE 300
CHARLOTTE, NORTH CAROLINA 28204
704·377·8800
CLARK NEXSEN LICENSE NUMBER: C-1028

CONSULTANTS

WALKER CONSULTANTS
13860 Ballantyne Corporate Place
Suite 140
Charlotte, NC 28277
T: 704.247.6230
www.walkerconsultants.com
NC License No. F-0518

McKIM&CREED
CIVIL ENGINEER
243 NORTH FRONT STREET
WILMINGTON, NORTH CAROLINA
28401
910.343.1048

CORPORATE SEAL

PROFESSIONAL SEAL
NOT FOR CONSTRUCTION

SUBMITTAL
04/15/2019
CONSTRUCTION DOCUMENT SUBMITTAL 01

REVISIONS

KEY PLAN

SHEET
GRADING, DRAINAGE AND UTILITY PLAN

CG100

DESIGN: TRC
DRAWN: TRC
REVIEW: RMC

8/9/2018 4:16:18 PM
S:\49990016\80\Drawings\CG100_49990016.dwg

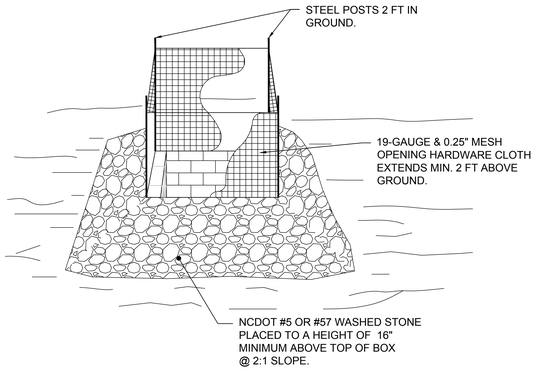

NOTES:

1. DRIVE 5-FOOT STEEL POSTS (1.25 lb/lf steel) 2 FEET INTO THE GROUND SURROUNDING THE INLET. SPACE POSTS EVENLY AROUND THE PERIMETER OF THE INLET, A MAXIMUM OF 4 FEET APART.
2. SURROUND THE POSTS WITH AT LEAST 19-GAUGE HARDWARE CLOTH WITH A 1/4-INCH MESH OPENING. SECURE THE WIRE MESH TO THE STEEL POSTS AT THE TOP, MIDDLE, AND BOTTOM FOR A MIN. 2 FEET ABOVE THE GROUND. PLACING A 2-FOOT FLAP OF THE WIRE MESH UNDER THE GRAVEL FOR ANCHORING AND REMOVAL IS RECOMMENDED.
3. UNIFORMLY GRADE A SHALLOW DEPRESSION APPROACHING THE INLET. THE TOP ELEVATION OF THE STRUCTURE MUST BE AT LEAST 12-INCHES LOWER THAN THE SURROUNDING GROUND ELEVATION DOWNSLOPE FROM THE INLET TO ENSURE THAT STORM FLOWS GET INTO THE INTENDED INLET; UNLESS OTHER SEDIMENT-CONTROL DEVICES ARE INSTALLED TO PREVENT OFF-SITE SEDIMENT-RUNOFF.

7 INLET PROTECTION

NTS

NOTE
STRUCTURAL STONE SHALL BE (CLASS "B") STONE FOR EROSION CONTROL PURPOSES. SEDIMENT CONTROL STONE SHALL BE NO. 5 OR NO. 57 STONE.

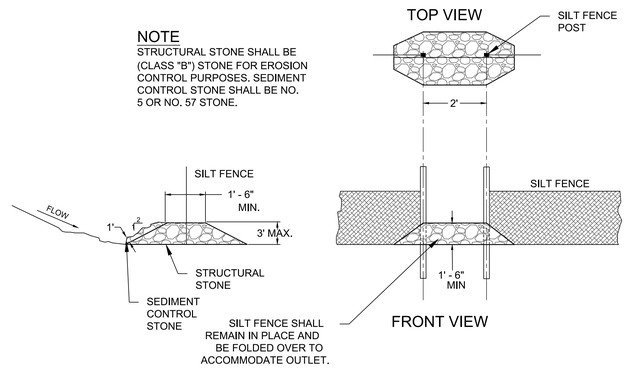

5 SILT FENCE STONE OUTLET

NTS

NOTE:
THE CRITICAL ROOT ZONE (CRZ) OF A TREE IS WHERE THE MAJORITY OF A TREE'S ROOTS LAY. 85% OF MOST TREE ROOTS ARE FOUND IN THE TOP 24" OF THE SOIL AND SUPPLY THE MAJORITY OF NUTRIENTS AND WATER. GENERALLY, ROOTS SPREAD OUT 2-3X THE HEIGHT OF THE TREE.

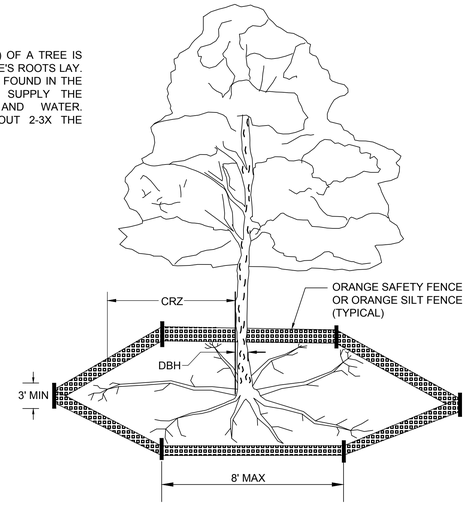

NOTES:

1. PROTECT CRITICAL ROOT ZONE (CRZ) OF TREES PRIOR TO CONSTRUCTION. CLEARLY MARK THE TREES AND ERECT A PROTECTIVE BARRIER AT THE CRZ. BARRIER SHALL BE MAINTAINED UNTIL CONSTRUCTION IS COMPLETE.
2. CRZ RADIUS IS 1 FT PER INCH OF TREE DIAMETER AT BREAST HEIGHT (DBH).
3. IF CONSTRUCTION OCCURS WITHIN THE CRZ, AT LEAST 12" OF MULCH AND/OR LOGGING MATTS SHALL BE PLACED WHERE MACHINERY MANEUVERS TO REDUCE SOIL COMPACTION IN THIS ZONE.
4. WHERE SIDEWALKS AND PATHWAYS PASS WITHIN CRZ, EXTRA CARE SHALL BE TAKEN TO AVOID DAMAGE TO THE ROOTS. ALTERNATE CONSTRUCTION METHODS, SUCH AS A REINFORCED SIDEWALK, SHALL BE IMPLEMENTED AS NECESSARY.
5. FOR ALL TREES, CUTTING OF LARGE STRUCTURAL ROOTS LOCATED NEAR THE BASE OF THE TRUNK IS PROHIBITED. DO NOT COMPACT SOIL BENEATH TREES. NO VEHICLE SHALL BE ALLOWED TO PARK UNDER TREES. NO MATERIALS OR EQUIPMENT SHALL BE STORED BENEATH TREES. DAMAGING THE BARK WITH LAWNMOWERS, CONSTRUCTION EQUIPMENT, OR ANYTHING ELSE IS PROHIBITED. CONTRACTOR SHALL REPAIR DAMAGE TO TREES.
6. FAILING TO INSTALL OR MAINTAIN PROTECTION MEASURES SHALL RESULT IN A STOP WORK ORDER AND FINE OF $500/DAY. DISTURBANCE OTHER THAN THAT ALLOWED ON THE APPROVED PLAN WILL REQUIRE OWNER TO POST A LETTER OF CREDIT FOR 3 YRS FOR TREE MITIGATION.

2 TREE PROTECTION FENCING

NTS

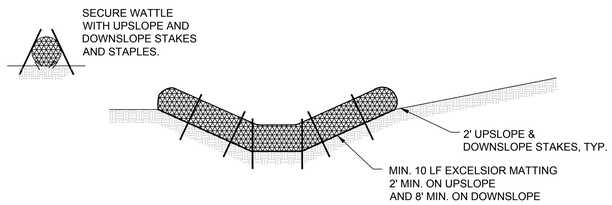

NOTES:

1. USE MINIMUM 12" DIA. EXCELSIOR WATTLE.
2. USE 2"x2" WOODEN STAKES 2-FT IN LENGTH ON THE UPSLOPE AND DOWNSLOPE AT AN ANGLE TO WEDGE THE WATTLE TO THE BOTTOM OF THE SWALE.
3. STAPLE EVERY 1 LF ON BOTH SIDES OF THE WATTLE TO SECURE IT TO THE BOTTOM OF THE SWALE.

4 TEMPORARY WATTLE (CHECK DAM)

NTS

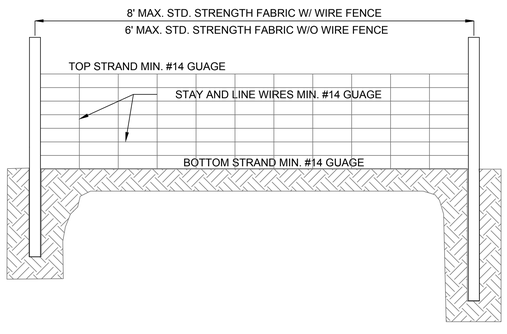

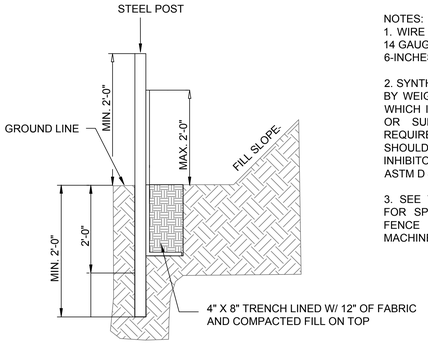

NOTES:

1. WIRE FENCE (IF USED) SHALL BE MINUMUM 14 GAUGE WITH A MAXIMUM MESH OPENING OF 6-INCHES.
2. SYNTHETIC FILTER FABRIC OF AT LEAST 95% BY WEIGHT OF POLYOLEFINS OR POLYESTER, WHICH IS CERTIFIED BY THE MANUFACTURER OR SUPPLIER AS CONFORMING TO THE REQUIREMENTS IN ASTM D 6461 AND ALSO SHOULD CONTAIN ULTRAVIOLET RAY INHIBITORS AND STABILIZERS ACCORDING TO ASTM D 4355.
3. SEE THE NC EROSION CONTROL MANUAL FOR SPECIFICATIONS INSTALLING SEDIMENT FENCE USING THE SLICING METHOD MACHINERY.

6 TEMPORARY SILT FENCE

NTS

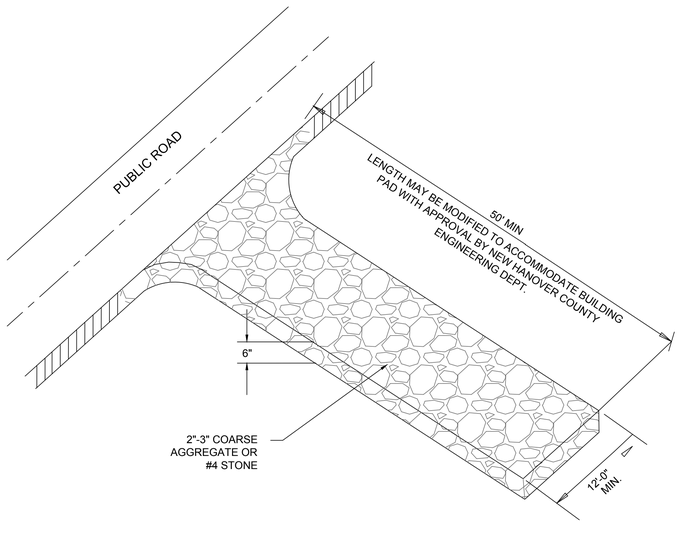

3 CONSTRUCTION ENTRANCE

NTS

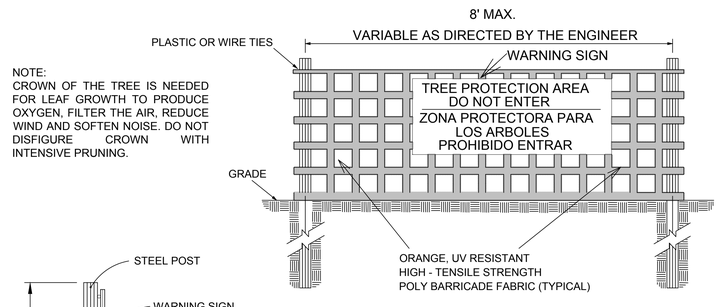

NOTE:
CROWN OF THE TREE IS NEEDED FOR LEAF GROWTH TO PRODUCE OXYGEN, FILTER THE AIR, REDUCE WIND AND SOFTEN NOISE. DO NOT DISFIGURE CROWN WITH INTENSIVE PRUNING.

FRONT VIEW

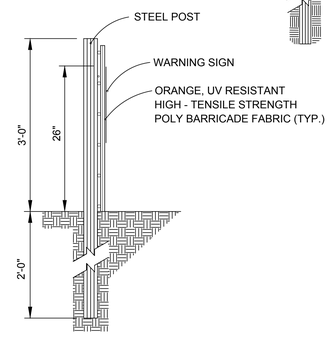

SIDE VIEW

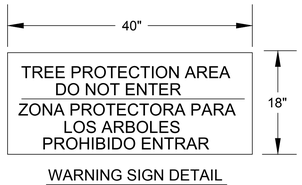

WARNING SIGN DETAIL

NOTES:

1. THE TREE PROTECTION FENCING SHALL NOT BE VIOLATED FOR THE ENTIRE DURATION OF THE PROJECT WITHOUT APPROVAL FROM URBAN FORESTRY STAFF.
2. WARNING SIGNS TO BE MADE OF DURABLE, WEATHERPROOF MATERIAL. LETTERS TO BE 3" HIGH, MINIMUM, CLEARLY LEGIBLE AND SPACED AS DETAILED.
3. SIGNS SHALL BE PLACED AT 50' MAXIMUM INTERVALS. PLACE A SIGN AT EACH END OF LINEAR TREE PROTECTION AND 50' ON CENTER THEREAFTER. FOR TREE PROTECTION AREAS LESS THAN 100' IN PERIMETER, PROVIDE NO LESS THAN TWO SIGNS PER PROTECTION AREA.
4. ATTACH SIGNS SECURELY TO FENCE POSTS AND FABRIC. MAINTAIN TREE PROTECTION FENCE AND SIGNS THROUGHOUT DURATION OF PROJECT.
5. TREE PROTECTION FENCING AND SIGNAGE SHALL BE REMOVED AFTER CONSTRUCTION.
6. ADDITIONAL SIGNS MAY BE REQUIRED BY CITY OF WILMINGTON, BASED ON ACTUAL FIELD CONDITIONS.

1 TREE PROCTECTION SIGNAGE

NTS

UNCW
UNIVERSITY of NORTH CAROLINA WILMINGTON
601 S COLLEGE ROAD
WILMINGTON, NORTH CAROLINA 28403

PARKING DECK II AND SURFACE PARKING (DESIGN-BUILD)
SOUTH CAMPUS - 4965 RIEGEL ROAD

SCO ID NUMBER: 18-19226-01A
CODE: 441828
ITEM: 301

CONTRACTOR
Balfour Beatty Construction

DESIGNER
CLARKNEXSEN
1523 ELIZABETH AVENUE, SUITE 300
CHARLOTTE, NORTH CAROLINA 28204
704·377·8800
CLARK NEXSEN LICENSE NUMBER: C-1028

CONSULTANTS
WALKER CONSULTANTS
13860 Ballantyne Corporate Place
Suite 140
Charlotte, NC 28277
T: 704.247.6230
www.walkerconsultants.com
NC License No. F-0518

McKIM&CREED
CIVIL ENGINEER
243 NORTH FRONT STREET
WILMINGTON, NORTH CAROLINA
28401
910.343.1048

CORPORATE SEAL

PROFESSIONAL SEAL
NOT FOR CONSTRUCTION
NORTH CAROLINA PROFESSIONAL SEAL 22915 ENGINEER
R. EDWARD M. COLLISON

SUBMITTAL
04/15/2019
CONSTRUCTION DOCUMENT SUBMITTAL 01

REVISIONS

KEY PLAN

SHEET
EROSION CONTROL DETAILS

CE501

DESIGN: TRC
DRAWN: TRC
REVIEW: RMC

8/9/2018 4:16:18 PM
S:\49990016\80-Drawings\CE501_49990016.dwg

SEEDBED PREPARATION:

1. CHISEL COMPACTED AREAS AND SPREAD TOPSOIL 3 INCHES DEEP OVER ADVERSE SOIL CONDITIONS, IF AVAILABLE.
2. RIP THE ENTRANCE AREA TO 6 INCHES DEPTH.
3. REMOVE ALL LOOSE ROCK, ROOTS, AND OTHER OBSTRUCTIONS LEAVING SURFACE REASONABLY SMOOTH AND UNIFORM.
4. APPLY AGRICULTURAL LIME, FERTILIZER, AND SUPERPHOSPHATE UNIFORMLY AND MIX WITH SOIL (SEE BELOW*).
5. CONTINUE TILLAGE UNTIL A WELL - PULVERIZED, FIRM, REASONABLY UNIFORM SEEDBED IS PREPARED 4 TO 6 INCHES DEEP.
6. SEED ON A FRESHLY PREPARED SEEDBED AND COVER SEED LIGHTLY WITH SEEDING EQUIPMENT OR CULTIPACK AFTER SEEDING.
7. MULCH IMMEDIATELY AFTER SEEDING AND ANCHOR MULCH.
8. INSPECT ALL SEEDED AREAS AND MAKE NECESSARY REPAIRS OR RESEEDINGS WITHIN THE PLANTING SEASON, IF POSSIBLE. IF STAND SHOULD BE OVER 60% DAMAGED, REESTABLISH FOLLOWING ORIGINAL LIME, FERTILIZER AND SEEDING RATES.
9. CONSULT CONSERVATION INSPECTOR ON MAINTENANCE TREATMENT AND FERTILIZATION AFTER PERMANENT COVER IS ESTABLISHED.
10. APPLY:
    AGRICULTURAL LIMESTONE - 2 TONS/ACRE
    FERTILIZER - 1000 LBS/ACRE (10-10-10)
    SUPERPHOSPHATE - 500 LBS/ACRE (20%)
    MULCH - 2 TONS/ACRE (SMALL GRAIN STRAW)
    ANCHOR - ASPHALT EMULSION AT 450 GAL/ACRE

EROSION CONTROL MAINTENANCE PLAN:

1. ALL SEDIMENT AND EROSION CONTROL DEVICES SHALL BE INSPECTED AND REPAIRED, AS NECESSARY, EVERY SEVEN (7) DAYS AND WITHIN 24 HOURS OF EVERY ONE-HALF (0.5) INCH OR GREATER RAINFALL OCCURRENCE.
2. ALL EROSION CONTROL DEVICES SHALL BE PROPERLY MAINTAINED DURING ALL PHASES OF CONSTRUCTION UNTIL THE COMPLETION OF ALL CONSTRUCTION ACTIVITIES AND ALL DISTURBED AREAS HAVE BEEN STABILIZED. ADDITIONAL CONTROL DEVICES MAY BE REQUIRED DURING CONSTRUCTION IN ORDER TO CONTROL EROSION AND/OR OFFSITE SEDIMENTATION. ALL TEMPORARY CONTROL DEVICES SHALL BE REMOVED ONCE CONSTRUCTION IS COMPLETE AND THE SITE IS STABILIZED.
3. SEDIMENT SHALL BE REMOVED FROM BEHIND THE SILT FENCE WHEN IT BECOMES ABOUT 0.5 FEET DEEP. THE SEDIMENT FENCE WILL BE REPAIRED OR REPLACED AS NECESSARY TO MAINTAIN A BARRIER.
4. ALL AREAS WILL BE FERTILIZED, RESEEDED AS NECESSARY, AND MULCHED ACCORDING TO SPECIFICATIONS IN THE VEGETATIVE PLAN TO MAINTAIN A VIGOROUS, DENSE VEGETATIVE COVER.
5. STONE CONSTRUCTION ENTRANCE TO BE CLEANED WHEN SEDIMENT ACCUMULATIONS ARE VISIBLE OR SEDIMENT IS TRACKED ON TO THE PAVEMENT. STONE WILL BE PERIODICALLY TOP DRESSED WITH 2 INCHES OF #4 STONE TO MAINTAIN 6 INCH DEPTH. THE CONTRACTOR SHALL DAILY REMOVE MUD/SOIL FROM PAVEMENT, AS REQUIRED.
6. INSPECT INLETS AT LEAST WEEKLY AND AFTER EACH SIGNIFICANT (0.5" OR GREATER) RAINFALL EVENT. CLEAR THE MESH WIRE OF ANY DEBRIS OR OTHER OBJECTS TO PROVIDE ADEQUATE FLOW FOR SUBSEQUENT RAINS. TAKE CARE NOT TO DAMAGE OR UNDERCUT THE WIRE MESH DURING SEDIMENT REMOVAL. REPLACE STONE AS NEEDED. INLET PROTECTION SHOULD BE CLEANED OUT WHEN IT IS HALF FULL.

EROSION CONTROL NOTES

1. ANY GRADING BEYOND THE DENUDED LIMITS SHOWN ON THE PLAN IS A VIOLATION OF THE COUNTY EROSION CONTROL ORDINANCE AND IS SUBJECT TO A FINE.
2. GRADING MORE THAN ONE ACRE WITHOUT AN APPROVED EROSION CONTROL PLAN IS A VIOLATION OF STATE LAW AND IS SUBJECT TO A FINE.
3. GROUND COVER MUST BE PROVIDED ON EXPOSED SLOPES WITHIN 21 CALENDAR DAYS FOLLOWING COMPLETION OF ANY PHASE OF GRADING; AND, A PERMANENT GROUND COVER FOR ALL DISTURBED AREAS WITHIN 15 WORKING DAYS OR 90 CALENDAR DAYS (WHICHEVER IS SHORTER) FOLLOWING COMPLETION OF CONSTRUCTION OR DEVELOPMENT.
4. ADDITIONAL MEASURES TO CONTROL EROSION AND SEDIMENT MAY BE REQUIRED BY A REPRESENTATIVE OF NEW HANOVER COUNTY.
5. SLOPES SHALL BE GRADED NO STEEPER THAN 3:1.
6. ADDITIONAL DEVICES MAY BE REQUIRED AS AGREED UPON BY THE FIELD INSPECTOR, ENGINEER, AND OWNER.
7. IF ACTIVE CONSTRUCTION CEASES IN ANY AREA FOR MORE THAN 15 WORKING DAYS OR 90 CALENDAR DAYS (WHICHEVER IS SHORTER), ALL DISTURBED AREAS MUST BE SEEDED, MULCHED, AND TACKED.
8. WITHIN 24 HOURS FOLLOWING ANY RAIN EVENT, THE CONTRACTOR SHALL INSPECT AND REPAIR, AS NECESSARY, ALL DAMAGED EROSION CONTROL MEASURES.
9. ALL ACTIVITY AND INSTALLATION OF EROSION CONTROL MATTING WILL BE COMPLETE PRIOR TO ANY RAIN EVENT.

5 NOTES — NTS

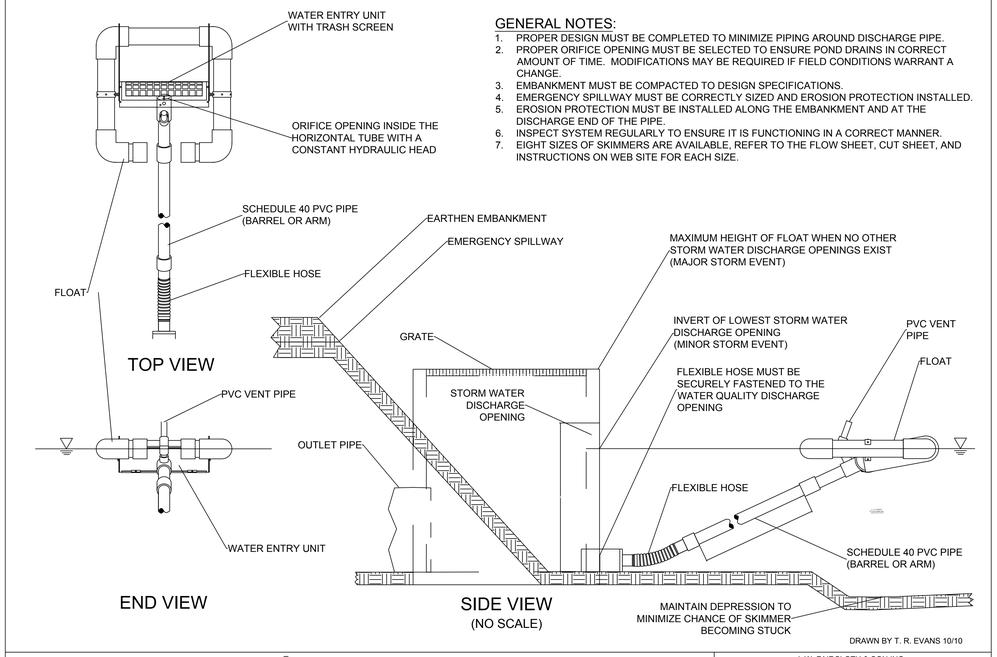

GENERAL NOTES:

1. PROPER DESIGN MUST BE COMPLETED TO MINIMIZE PIPING AROUND DISCHARGE PIPE.
2. PROPER ORIFICE OPENING MUST BE SELECTED TO ENSURE POND DRAINS IN CORRECT AMOUNT OF TIME. MODIFICATIONS MAY BE REQUIRED IF FIELD CONDITIONS WARRANT A CHANGE.
3. EMBANKMENT MUST BE COMPACTED TO DESIGN SPECIFICATIONS.
4. EMERGENCY SPILLWAY MUST BE CORRECTLY SIZED AND EROSION PROTECTION INSTALLED.
5. EROSION PROTECTION MUST BE INSTALLED ALONG THE EMBANKMENT AND AT THE DISCHARGE END OF THE PIPE.
6. INSPECT SYSTEM REGULARLY TO ENSURE IT IS FUNCTIONING IN A CORRECT MANNER.
7. EIGHT SIZES OF SKIMMERS ARE AVAILABLE, REFER TO THE FLOW SHEET, CUT SHEET, AND INSTRUCTIONS ON WEB SITE FOR EACH SIZE.

DRAWN BY T. R. EVANS 10/10

FAIRCLOTH® SKIMMER DISCHARGE SYSTEM WITH OUTLET STRUCTURE

J. W. FAIRCLOTH & SON INC.
WWW.FAIRCLOTHSKIMMER.COM
TELEPHONE: (919) 732-1244
FAX: (919) 732-1266
EMAIL: WARREN@FAIRCLOTHSKIMMER.COM

2 FAIRCLOTH SKIMMER — NTS

SKIMMER BASIN CALCULATION TABLE

Skimmer No.	Drainage Area ac	Rational C Runoff Coeff.	I10 Intensity in/hr	Q10 Peak Flow cfs		Required SA (350 x Q10) sf	Provided SA sf	Required Vol (1800cf/ac x DA) cf	Provided Vol cf	Storage Depth ft	Storage Vol Drained cf		Weir Width ft
TSB-1	1.52	0.95	7.23	10.44		3,654	7,086	2,736	24,769	7.59	24,769		50.0

FAIRCLOTH SKIMMER SIZE CALCULATION

Skimmer No.	Dewatering Time (days)	Skimmer Outflow cf/day	Skimmer Size in	Orifice Diameter in	Orifice Radius in	Barrel Outflow gpm	Barrel Pipe in	
TSB-1	3	8,256	8.0	2.5	1.2	42.9	12.0	Draw to 30
TSB-1	3	912	8.0	0.8	0.4	4.7	12.0	Req'd Draw

Faircloth Skimmer Selection Table

Skimmer Size in	Outflow Qmax cf/day	Head ft
1.5	1,728	0.125
2	3,283	0.167
2.5	6,234	0.208
3	9,774	0.250
4	20,109	0.333
5	32,832	0.333
6	51,840	0.417
8	97,978	0.500

NOTES:
1. Q10 Peak Flow were taken from Rational Method.
2. Required Surface Areas and Volumes were taken from NCDENR ESC Manual.
3. Faircloth Skimmer Selection Table taken from Table 4-2. NCDOT Level III-A Design of Sediment & Erosion Control Plans Manual
4. Emergency Weir Width taken from Skimmer Basin Criteria Section of NCDENR ESC Manual Table and/or Hydraulic Routing of the basin to ensure non-erosive velocity.
5. Minimum Barrel Pipe on the Skimmer is 4-inches. (On a 1% slope the capacity is 100 GPM)

4 SEDIMENT BASIN CALCULATIONS — NTS

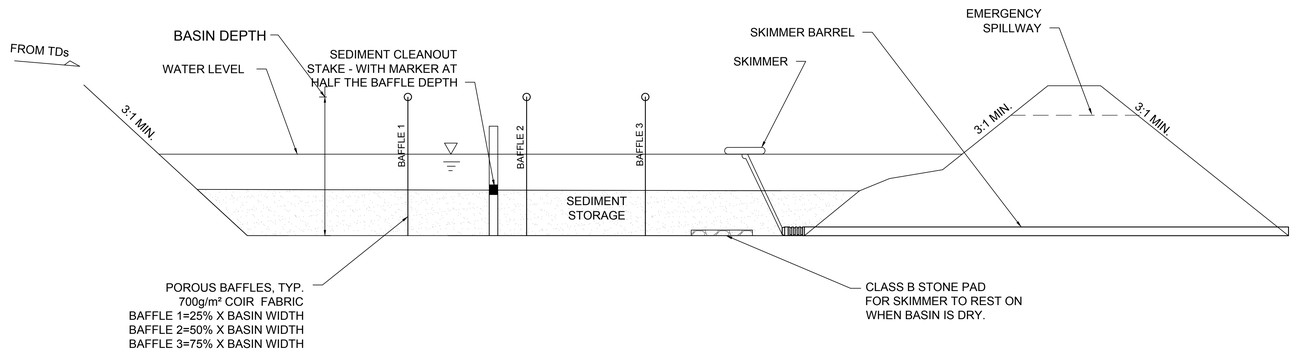

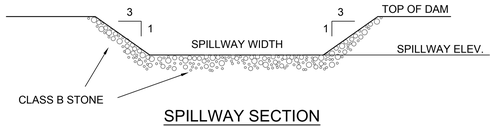

SPILLWAY SECTION

NOTES:

1. BAFFLE MATERIAL SHALL BE MATERIALS SUCH AS 700 GPM COIR EROSION BLANKET, COIR MESH, OR TREE PROTECTION FENCE FOLDED OVER TO REDUCE PORE SIZE.
2. THE BAFFLE MATERIAL NEEDS TO BE SECURED AT THE BOTTOM AND SIDES USING STAPLES OR BY TRENCHING AS FOR SILT FENCE.
3. LOCATE THE EMERGENCY SPILLWAY ON NATURAL SOILS. AVOID PLACING IT THROUGH FILL MATERIAL WHEREVER POSSIBLE.
4. ALL RUNOFF MUST DISCHARGE TO THE INLET SIDE OF THE BASIN. DISCHARGE RUNOFF INTO THE BASIN IN A MANNER THAT MINIMIZES EROSION.

NOTES:

ORIFICE SIZES ARE FOR THE FAIRCLOTH SKIMMER. IF ANOTHER TYPE OF SKIMMER IS USED THE DEVICE MUST BE ABLE TO DRAIN THE BASIN WITHIN 24 - 72 HOURS.

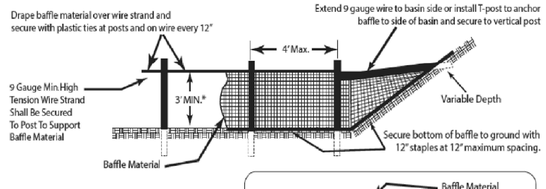

* If the temporary sediment basin will be converted to a permanent stormwater basin of greater depth, the baffle height should be based on the pool depth during use as a temporary sediment basin.

Note: Install three (3) coir fiber baffles in basins at drainage outlets with a spacing of 1/4 the basin length. Two (2) coir fiber baffles can be installed in the basins less than 20 ft. in length with a spacing of 1/3 the basin length.

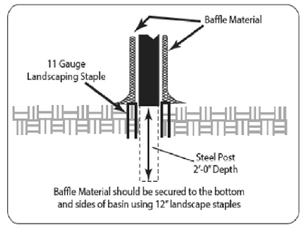

1 SKIMMER SEDIMENT BASIN — NTS

TEMPORARY SEEDING			
GRASS TYPE	AMOUNT/ 1000 S.F.	TIME OF SEEDING	INITIAL
RYE GRAIN	1-2 LBS.	APRIL - JUNE	25 LBS. 10-10-10
BROWNTOP MILLET	1-2 LBS	JUNE - AUGUST	25 LBS 10-10-10

PERMANENT SEEDING			
GRASS TYPE	AMOUNT/ 1000 S.F.	TIME OF SEEDING	INITIAL
BERMUDA, COMMON	1-2 LBS.	APRIL - JUNE	25 LBS. 10-10-10
FESCUE, TALL (KENTUCKY 31)	5-7 LBS	JUNE - AUGUST FEB. - OCT.	25 LBS 10-10-10
SERICEA LESPEDEZA (SLOPES	1-2 LBS	MARCH - APRIL	25 LBS 10-10-10

GROUND STABILIZATION CRITERIA		
SITE AREA DESCRIPTION	STABILIZATION TIMEFRAME	STABILIZATION TIMEFRAME EXCEPTIONS
PERIMETER DIKES, SWALES, DITCHES AND SLOPES	7 DAYS	NONE
HIGH QUALITY WATER ZONES	7 DAYS	NONE
SLOPES STEEPER THAN 3:1	7 DAYS	IF SLOPES ARE 10 FT OR LESS IN IN LENGTH AND ARE NOT STEEPER THAN 2:1, 14 DAYS ARE ALLOWED
SLOPES 3:1 OR FLATTER	14 DAYS	7 DAYS FOR SLOPES GREATER THAN 50 FT IN LENGTH
ALL OTHER AREAS WITH SLOPES FLATTER THAN 4:1	14 DAYS	NONE (EXCEPT FOR PERIMETERS AND HQW ZONES)

NOTE (G.S. 113A-57 (2))
THE ANGLE FOR GRADED SLOPES AND FILLS SHALL BE NO GREATER THAN THE ANGLE THAT CAN BE RETAINED BY VEGETATIVE COVER OR OTHER ADEQUATE EROSION CONTROL DEVICES OR STRUCTURES. IN ANY EVENT, SLOPES LEFT EXPOSED WILL, WITHIN 21 CALENDAR DAYS OF COMPLETION OF ANY GRADING, BE PLANTED OR OTHERWISE PROVIDED WITH TEMPORARY OR PERMANENT GROUND COVER, DEVICES, OR STRUCTURES SUFFICIENT TO RESTRAIN EROSION.

3 SEEDING & STABILIZATION — NTS

UNCW
UNIVERSITY of NORTH CAROLINA WILMINGTON
601 S COLLEGE ROAD
WILMINGTON, NORTH CAROLINA 28403

PARKING DECK II AND SURFACE PARKING (DESIGN-BUILD)
SOUTH CAMPUS - 4965 RIEGEL ROAD

SCO ID NUMBER: 18-19226-01A
CODE: 441828
ITEM: 301

CONTRACTOR
Balfour Beatty Construction

DESIGNER

CLARKNEXSEN
1523 ELIZABETH AVENUE, SUITE 300
CHARLOTTE, NORTH CAROLINA 28204
704·377·8800
CLARK NEXSEN LICENSE NUMBER: C-1028

CONSULTANTS

WALKER CONSULTANTS
13860 Ballantyne Corporate Place
Suite 140
Charlotte, NC 28277
T: 704.247.6230
www.walkerconsultants.com
NC License No. F-0518

McKIM&CREED
CIVIL ENGINEER
243 NORTH FRONT STREET
WILMINGTON, NORTH CAROLINA
28401
910.343.1048

CORPORATE SEAL

PROFESSIONAL SEAL

SUBMITTAL
04/15/2019
CONSTRUCTION DOCUMENT SUBMITTAL 01

REVISIONS

KEY PLAN

SHEET
EROSION CONTROL DETAILS

CE502

DESIGN: TRC
DRAWN: TRC
REVIEW: RMC

8/9/2018 4:16:18 PM
S:\49990016\80-Drawings\CE501_49990016.dwg

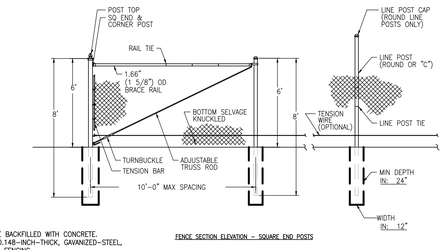

NOTES:
1. POST HOLES TO BE BACKFILLED WITH CONCRETE.
2. MINIMUM 2-INCH, 0.148-INCH-THICK, GAVANIZED-STEEL, CHAIN-LINK FABRIC FENCING
3. MINIMUM 6-FEET HIGHT WITH GALVANIZED-STEEL PIPE POSTS
4. MINIMUM 2-3/8-INCH-OD LINE POSTS
5. 2-7/8-INCH-OD CORNER AND PULL POSTS

FENCE SECTION ELEVATION – SQUARE END POSTS

	END & CORNER POST TOP OPTIONS		TOP & BOTTOM FABRIC OPTIONS	
	STANDARD	FLAT	TWIST	KNUCKLE
CHECK DESIRED OPTIONS ☑	☐	☑	☐	☑

6' HIGH CHAINLINK FENCE

NTS

2 TEMPORARY SECURITY FENCE NTS

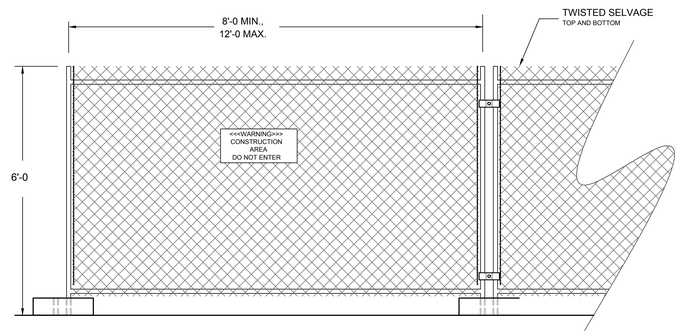

NOTES

1. CHAIN LINK FABRIC TO BE MIN. 11 GAUGE, GALVANIZED. NO RUSTED OR EXCESSIVELY MALFORMED FABRIC.
2. FENCE BASES SHALL BE OF SUFFICIENT WEIGHT and/or SPREAD TO ADEQUATELY SUPPORT EACH PANEL.
3. PANEL-TO-PANEL CONNECTIONS SHALL BE MADE AT A MIN. TWO LOCATIONS PER CONNECTION UNLESS OTHERWISE APPROVED.
4. PROVIDE CONSTRUCTION WARNING SIGNAGE 50'O.C. ALONG FENCING INSTALLATION.

1 TEMPORARY CONSTRUCTION FENCING NTS

UNCW
UNIVERSITY of NORTH CAROLINA WILMINGTON
601 S COLLEGE ROAD
WILMINGTON, NORTH CAROLINA 28403

PARKING DECK II AND SURFACE PARKING (DESIGN-BUILD)
SOUTH CAMPUS - 4965 RIEGEL ROAD

SCO ID NUMBER: 18-19226-01A
CODE: 441828
ITEM: 301

CONTRACTOR
Balfour Beatty Construction

DESIGNER
CLARKNEXSEN
1523 ELIZABETH AVENUE, SUITE 300
CHARLOTTE, NORTH CAROLINA 28204
704·377·8800

CLARK NEXSEN LICENSE NUMBER: C-1028

CONSULTANTS
WALKER CONSULTANTS
13860 Ballantyne Corporate Place
Suite 140
Charlotte, NC 28277
T: 704.247.6230
www.walkerconsultants.com
NC License No. F-0518

McKIM&CREED
CIVIL ENGINEER
243 NORTH FRONT STREET
WILMINGTON, NORTH CAROLINA
28401
910.343.1048

CORPORATE SEAL

PROFESSIONAL SEAL
NORTH CAROLINA PROFESSIONAL SEAL 22915 ENGINEER RICHARD M. COLLINS

SUBMITTAL
04/15/2019
CONSTRUCTION DOCUMENT SUBMITTAL 01

REVISIONS

KEY PLAN

SHEET
EROSION CONTROL DETAILS

CE503

DESIGN: TRC
DRAWN: TRC
REVIEW: RMC

8/9/2018 4:16:18 PM
S:\49990016\80-Drawings\CE501_49990016.dwg

NOTES:
1. MAXIMUM RAMP RISE NOT TO EXCEED 6".
2. SEE ALSO CONCRETE PAVEMENT NOTES 3/CS502
3. TRUNCATED DOME WARNING MAT - 2' X 4' TRUNCATED DOME PAD, WET SET AND FASTEN PER MANUFACTURE RECOMMENDATION, COLOR TO BE RED TO MATCH EXISTING CAMPUS APPLICATIONS

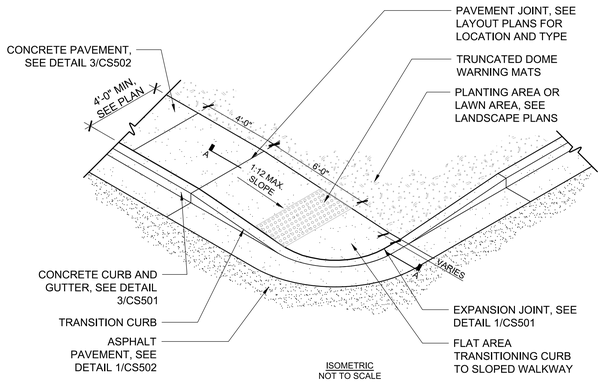

ISOMETRIC
NOT TO SCALE

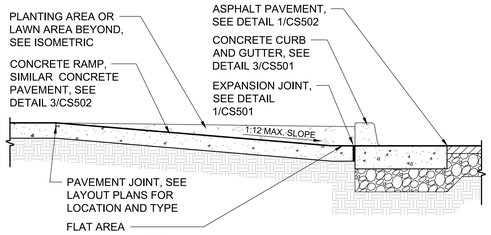

SECTION A
3/4" = 1'-0"

5 DEPRESSED CURB - TYPE 1 NTS

NOTE:
1. HOODED SENTRY (#HS-004-20) TRASH RECEPTACLE
2. SIZE: 20" x 20" x 40" (NO DOORS)

6 TRASH CAN NTS

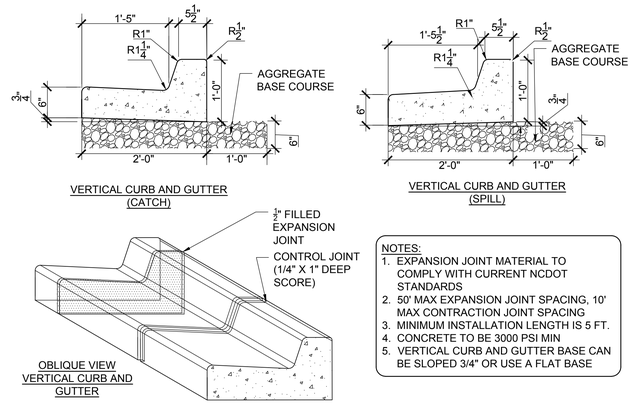

NOTES:
1. EXPANSION JOINT MATERIAL TO COMPLY WITH CURRENT NCDOT STANDARDS
2. 50' MAX EXPANSION JOINT SPACING, 10' MAX CONTRACTION JOINT SPACING
3. MINIMUM INSTALLATION LENGTH IS 5 FT.
4. CONCRETE TO BE 3000 PSI MIN
5. VERTICAL CURB AND GUTTER BASE CAN BE SLOPED 3/4" OR USE A FLAT BASE

3 CURB AND GUTTER NTS

NOTES:
1. MAXIMUM RAMP RISE NOT TO EXCEED 6".
2. SEE ALSO CONCRETE PAVEMENT NOTES 3/CS502
3. TRUNCATED DOME WARNING MAT - 2' X 4' TRUNCATED DOME PAD, WET SET AND FASTEN PER MANUFACTURE RECOMMENDATION, COLOR TO BE RED TO MATCH EXISTING CAMPUS APPLICATIONS

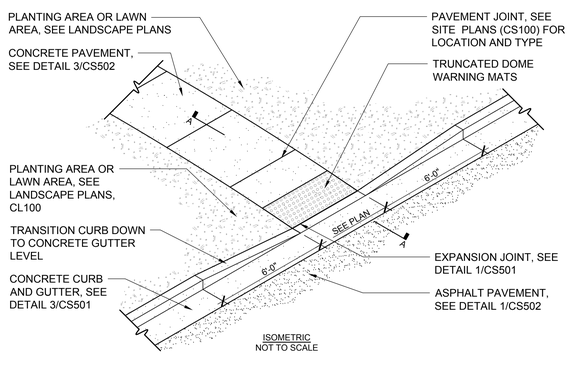

ISOMETRIC
NOT TO SCALE

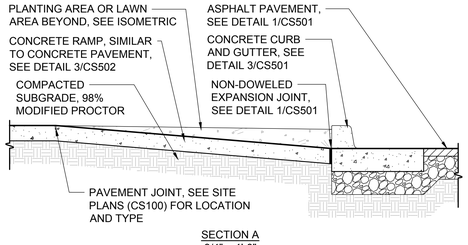

SECTION A
3/4" = 1'-0"

4 DEPRESSED CURB - TYPE 2 NTS

NOTES:
1. MAXIMUM RAMP RISE NOT TO EXCEED 6".
2. SEE ALSO CONCRETE PAVEMENT NOTES 3/CS502
3. TRUNCATED DOME WARNING MAT - 2' X 4' TRUNCATED DOME PAD, WET SET AND FASTEN PER MANUFACTURE RECOMMENDATION, COLOR TO BE RED TO MATCH EXISTING CAMPUS APPLICATIONS

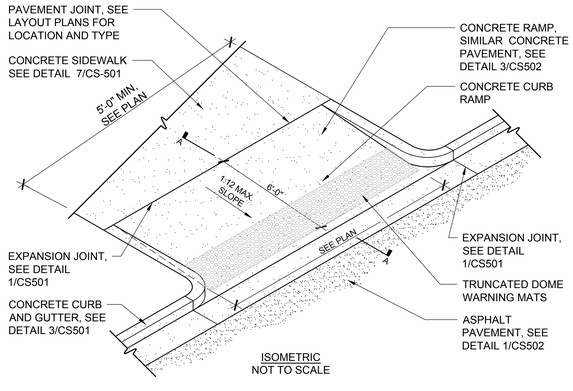

ISOMETRIC
NOT TO SCALE

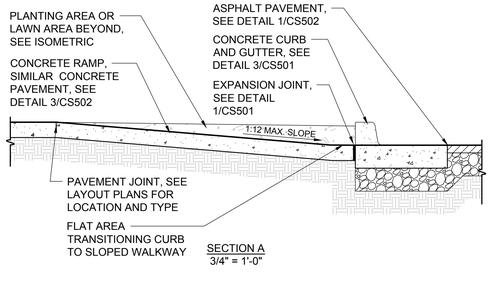

SECTION A
3/4" = 1'-0"

2 DEPRESSED CURB - TYPE 3 NTS

NOTES:
1. EXPANSION JOINTS SHALL BE LOCATED AS INDICATED ON THE SITE PLANS.
2. EXTEND EXPANSION JOINT 100% THROUGH PAVEMENT SURFACE.
3. ENSURE JOINTS ARE FREE OF NON-COMPRESSABLE MATERIALS DURING INSTALLATION AND AFTER INSTALLATION.
4. SEE CONTROL JOINT AND CONSTRUCTION JOINT DETAIL 1/CS501

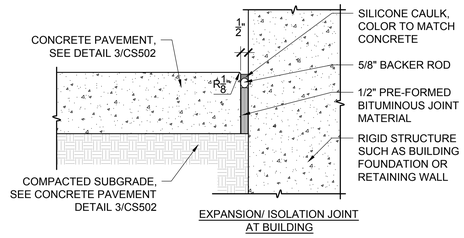

EXPANSION/ ISOLATION JOINT AT BUILDING

NOTES:
1. EXPANSION JOINTS SHALL BE LOCATED AS INDICATED ON THE SITE PLANS.
2. EXTEND EXPANSION JOINT 100% THROUGH PAVEMENT SURFACE.
3. ENSURE JOINTS ARE FREE OF NON-COMPRESSABLE MATERIALS DURING INSTALLATION AND AFTER INSTALLATION.
4. SEE CONTROL JOINT AND CONSTRUCTION JOINT DETAIL CS501

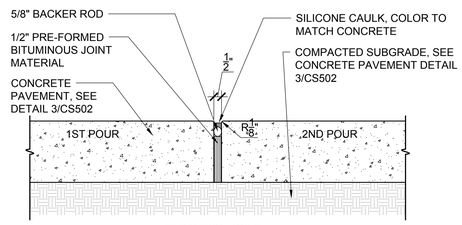

EXPANSION JOINT

NOTES:
1. CONTROL JOINTS SHALL BE LOCATED AS INDICATED ON SITE PLANS.
2. EXTEND JOINT GROOVE 1" BELOW FINISH GRADE OR 25% OF PAVEMENT THICKNESS WHICHEVER IS GREATER.
3. SEE EXPANSION/ISOLATION JOINT AND CONSTRUCTION JOINT DETAIL, CS501

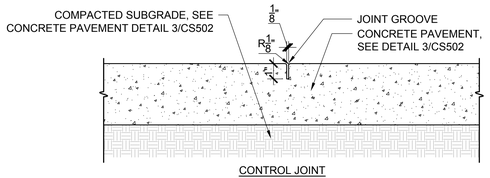

CONTROL JOINT

NOTES:
1. CONSTRUCTION JOINTS AS NEEDED AT CONTROL JOINT LOCATIONS AS INDICATED ON SITE PLANS.
2. EXTEND JOINT GROOVE 1" BELOW FINISH GRADE OR 25% OF PAVEMENT THICKNESS WHICHEVER IS GREATER
3. SEE EXPANSION/ISOLATION JOINT AND CONTROL JOINT DETAIL 1/CS501 .

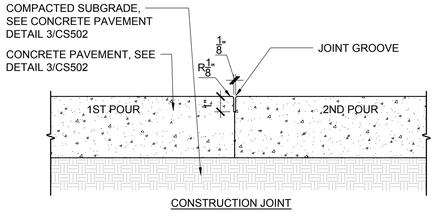

CONSTRUCTION JOINT

1 PAVEMENT JOINTING SCALE: 3" = 1'-0"

UNCW
UNIVERSITY of NORTH CAROLINA WILMINGTON
601 S COLLEGE ROAD
WILMINGTON, NORTH CAROLINA 28403

PARKING DECK II AND SURFACE PARKING (DESIGN-BUILD)
SOUTH CAMPUS - 4965 RIEGEL ROAD

SCO ID NUMBER: 18-19226-01A
CODE: 441828
ITEM: 301

CONTRACTOR
Balfour Beatty Construction

DESIGNER

CLARKNEXSEN
1523 ELIZABETH AVENUE, SUITE 300
CHARLOTTE, NORTH CAROLINA 28204
704·377·8800
CLARK NEXSEN LICENSE NUMBER: C-1028

CONSULTANTS

WALKER CONSULTANTS
13860 Ballantyne Corporate Place
Suite 140
Charlotte, NC 28277
T: 704.247.6230
www.walkerconsultants.com
NC License No. F-0518

McKIM&CREED
CIVIL ENGINEER
243 NORTH FRONT STREET
WILMINGTON, NORTH CAROLINA
28401
910.343.1048

CORPORATE SEAL

PROFESSIONAL SEAL

SUBMITTAL
04/15/2019
CONSTRUCTION DOCUMENT SUBMITTAL 01

REVISIONS

KEY PLAN

SHEET
SITE DETAILS

CS501

DESIGN: TRC
DRAWN: TRC
REVIEW: RMC

8/9/2018 4:16:18 PM
S:\49990016\80\Drawings\CS501_49990016.dwg

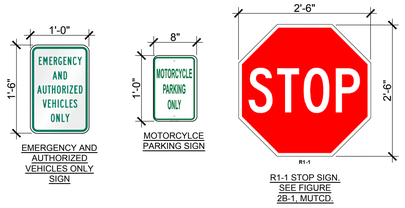

9 SIGNS

SCALE: NTS

NOTE:
1. SEE SITE PLAN SHEETS (CS100) FOR LOCATIONS
2. IMPRINTED ASPHALT TOPICAL TREATMENT TO BE APPLIED TO ASPHALT PAVEMENT TYPE 2, SEE DETAIL 1/CS502.
3. IMPRINTED ASPHALT COLOR TO BE BRICK RED TO MATCH EXISTING CAMPUS CROSSWALK APPLICATIONS.

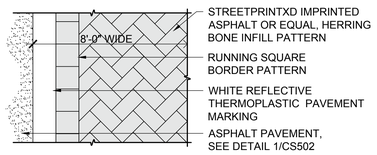

8 IMPRINTED ASPHALT CROSSWALK

SCALE: NTS

NOTES:
1. GENERALLY, PERMANENT MARKINGS WILL BE UNIFORM AND SMOOTH AND WILL CONSIST OF 120MIL OF THERMOPLASTIC FOR ALL LINES AND SYMBOLS; TEMPORARY MARKINGS SHALL CONSISTS OF 15 MIL PAINT, EVERY 6 MONTHS.
2. DURING APPLICATION THE EXISTING PAVEMENT SHALL NOT SHOW SIGNS OF MOISTURE AND BE CLEAN, FREE OF DIRT AND OIL, ETC. THERMOPLASTIC SHALL ONLY BE INSTALLED WHERE PAVEMENT IS 50° F AND RISING. PAINT SHALL ONLY BE INSTALLED WHERE PAVEMENT IS 40° F AND RISING.
3. SEE DETAIL 6/CS502 FOR PARKING LOT PAVEMENT MARKINGS.

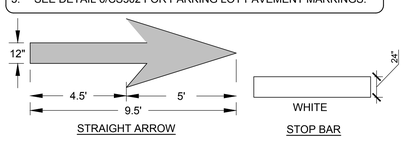

7 PAVEMENT MARKINGS

SCALE: NTS

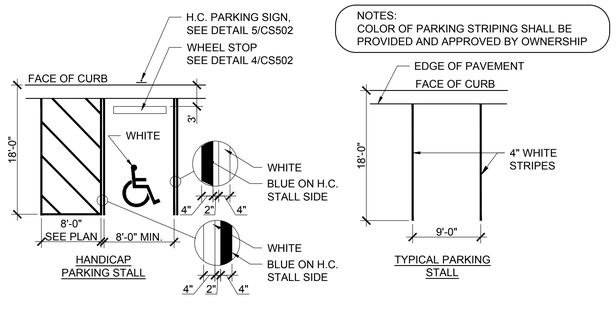

NOTES:
COLOR OF PARKING STRIPING SHALL BE PROVIDED AND APPROVED BY OWNERSHIP

6 ACCESSIBLE PARKING SIGN AND PARKING SPACE LAYOUT

NTS

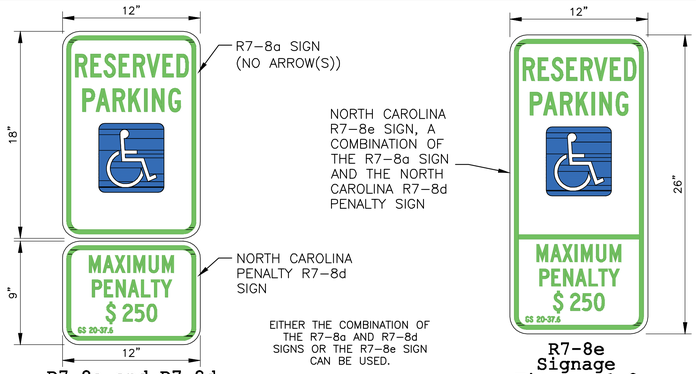

EITHER THE COMBINATION OF THE R7–8a AND R7–8d SIGNS OR THE R7–8e SIGN CAN BE USED.

R7-8a and R7-8d Signage Figure A1.1

R7-8e Signage Figure A1.2

WHERE VAN ACCESSIBLE PARKING IS PROVIDED, THE VAN ACCESSIBLE (R7–8P) SIGN SHALL BE MOUNTED BELOW THE OTHER ACCESSIBLE PARKING SIGNS. (2009 EDITION MUTCD SECTION 2B.47)

R7-8P Signage Figure A1.3

FOR DESIGN OF ACCESSIBLE SIGNS, SEE THE FOLLOWING:
- 2009 MUTCD OR LATEST EDITION.
- 2004 EDITION OF THE STANDARD HIGHWAY SIGNS AND THE 2012 SUPPLEMENT OR LATEST EDITION.
- NORTH CAROLINA 2009 SUPPLEMENT TO THE MANUAL OF UNIFORM TRAFFIC CONTROL DEVICES OR LATEST EDITION
- NCDOT DRAWING H–1_S FOR SIGNS SP00075, SP00076, AND SP00077.

NOTE:
REFER TO STRUCTURAL AND/OR ARCHITECTURE DRAWINGS FOR SIGNAGE INTERIOR TO PARKING DECK

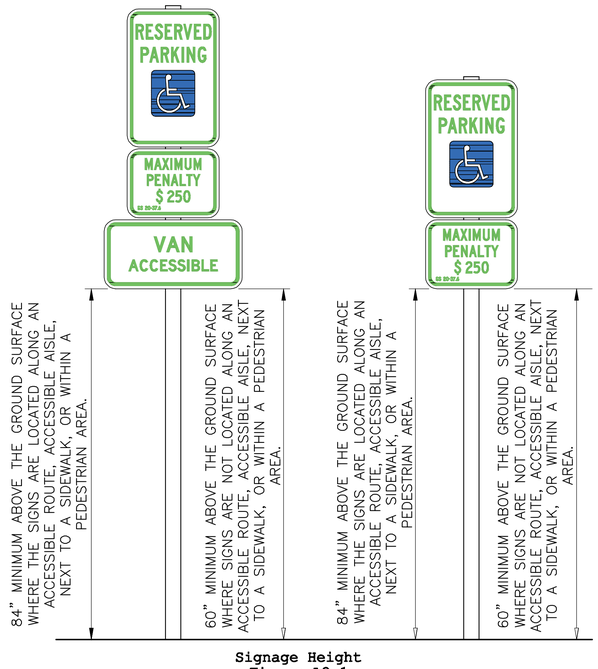

Signage Height Figure A2.1

5 ACCESSIBLE PARKING SIGNAGE

NTS

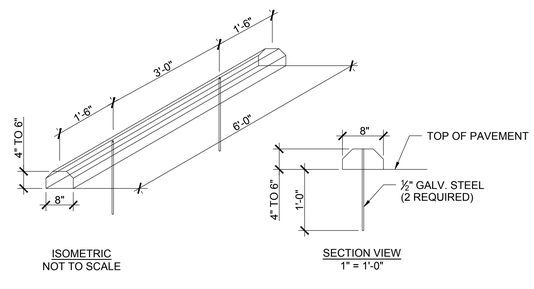

4 CONCRETE WHEEL STOP

SCALE = 1" = 1'-0"

NOTES:
1. ALL WALKWAYS SHALL MEET OR EXCEED GOVERNING MUNICIPALITIES REQUIREMENTS.
2. SUBGRADE SHALL NOT CONTAIN ANY ORGANIC MATTER.
3. REFER TO SITE PLANS FOR PAVEMENT JOINT TYPES AND LOCATIONS
4. PER ADA REQUIREMENTS: MAXIMUM CROSS SLOPE OF WALKING SURFACE SHALL NOT BE STEEPER THAN 1:48, MAXIMUM RUNNING SLOPE OF WALKING SURFACE SHALL NOT BE STEEPER THAN 1:20, WALKING SURFACES ALONG AN ACCESSIBLE ROUTE STEEPER THAN 1:20 REQUIRE RAMPS, RAMP RUNS WITH A RISE GREATER THAN 6" SHALL HAVE HANDRAILS, RAMP RUNS SHALL HAVE A RUNNING SLOPE NOT STEEPER THAN 1:12, MAXIMUM RISE PER RAMP IS 30", LANDINGS MUST BE PROVIDED WHERE NECESSARY. CONTRACTOR SHALL NOTIFY ENGINEER OF ANY DISCREPANCIES.

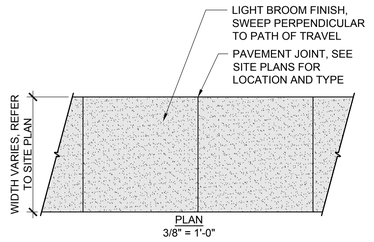

NOTE: PAVEMENT SHALL BE CONSTRUCTED OF 4,000 PSI CONCRETE. REINFORCEMENT SHALL BE WELDED WIRE FABRIC SPACED 6" O. C. BOTH DIRECTIONS, AS INDICATED BELOW. SURFACE FINISHES AND JOINTS SHALL BE AS INDICATED IN SPECIFICATIONS.

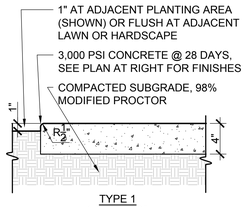

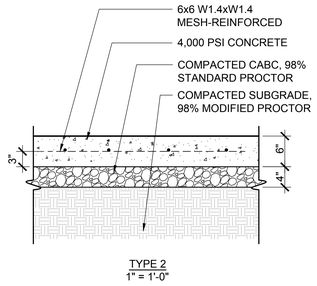

3 CONCRETE PAVEMENT - TYPE 1 AND 2

SCALE: 1" = 1'-0"

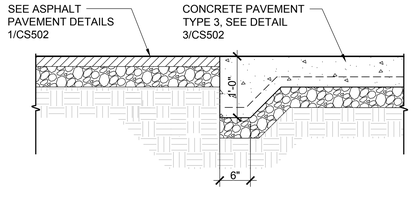

2 CONCRETE TO ASPHALT TRANSITION

NTS

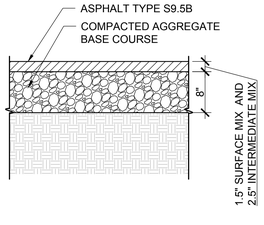

1 ASPHALT PAVEMENT

SCALE: 1" = 1'-0"

UNCW
UNIVERSITY of NORTH CAROLINA WILMINGTON
601 S COLLEGE ROAD
WILMINGTON, NORTH CAROLINA 28403

PARKING DECK II AND SURFACE PARKING (DESIGN-BUILD)
SOUTH CAMPUS - 4965 RIEGEL ROAD

SCO ID NUMBER: 18-19226-01A
CODE: 441828
ITEM: 301

CONTRACTOR
Balfour Beatty Construction

DESIGNER

CLARKNEXSEN
1523 ELIZABETH AVENUE, SUITE 300
CHARLOTTE, NORTH CAROLINA 28204
704·377·8800
CLARK NEXSEN LICENSE NUMBER: C-1028

CONSULTANTS

WALKER CONSULTANTS
13860 Ballantyne Corporate Place
Suite 140
Charlotte, NC 28277
T: 704.247.6230
www.walkerconsultants.com
NC License No. F-0518

McKIM&CREED
CIVIL ENGINEER
243 NORTH FRONT STREET
WILMINGTON, NORTH CAROLINA
28401
910.343.1048

CORPORATE SEAL

PROFESSIONAL SEAL

SUBMITTAL
04/15/2019
CONSTRUCTION DOCUMENT SUBMITTAL 01

REVISIONS

KEY PLAN

SHEET
SITE DETAILS

CS502

DESIGN: TRC
DRAWN: TRC
REVIEW: RMC

8/9/2019 4:16:18 PM
S:\4999001\080-Drawings\CS501_4999001f.dwg

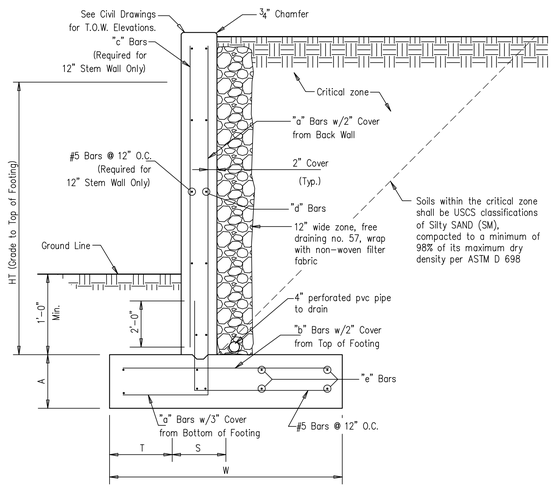

RETAINING WALL PROPORTIONS AND REINFORCING SCHEDULE									
HEIGHT (HT) RANGE	A	S	T	W	"a" BARS	"b" BARS	"c" BARS	"d" BARS	"e" BARS
0 FT. < HT < 4 FT.	12"	8"	1'-6"	4'-0"	#5 @ 12"	#5 @ 12"	NA	#5 @ 9"	#5 @ 12"
4 FT. < HT < 6 FT.	12"	8"	1'-6"	5'-0"	#6 @ 12"	#6 @ 12"	NA	#5 @ 9"	#5 @ 12"
6 FT. < HT < 8 FT.	15"	12"	2'-0"	7'-0"	#6 @ 12"	#6 @ 12"	#5 @ 12"	#5 @ 12"	#5 @ 10"
8 FT. < HT < 10 FT.	15"	12"	2'-0"	8'-0"	#7 @ 12"	#7 @ 12"	#5 @ 12"	#5 @ 12"	#5 @ 10"

4 CIP WALL SCHEDULE NTS

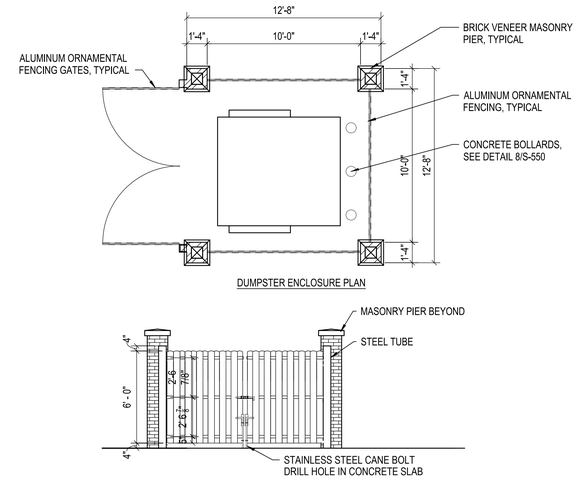

DUMPSTER ENCLOSURE PLAN

ELEVATION AT DUMPSTER ENCLOSURE GATES

WALL SECTION THROUGH DUMPSTER ENCLOSURE

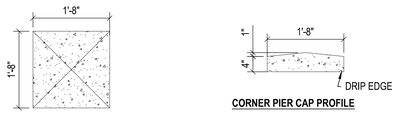

CORNER PIER CAP PLAN

CORNER PIER CAP PROFILE

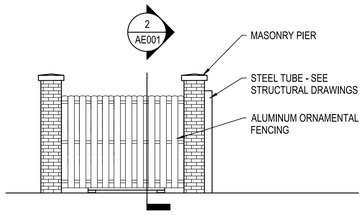

ELEVATION AT DUMPSTER ENCLOSURE - SIDE

3 DUMPSTER ENCLOSURE NTS

NOTES:
1. EXPANSION JOINT MATERIAL TO COMPLY WITH CURRENT NCDOT STANDARDS
2. 10' MAX CONTROL JOINT SPACING
3. MINIMUM INSTALLATION LENGTH IS 5 FT.
4. SITE CURBING TO ALIGN WITH CURBING WITHIN DECK, ALL DIMENSIONS TO MATCH, DECK DIMENSIONS SHALL GOVERN

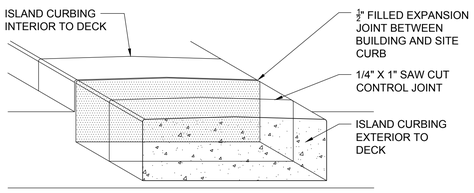

ISOMETRIC

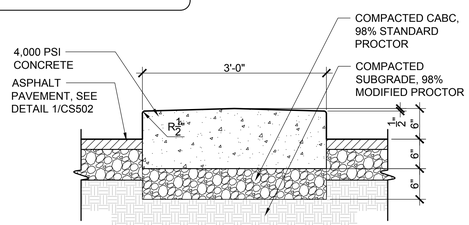

SECTION

5 ISLAND CURB NTS

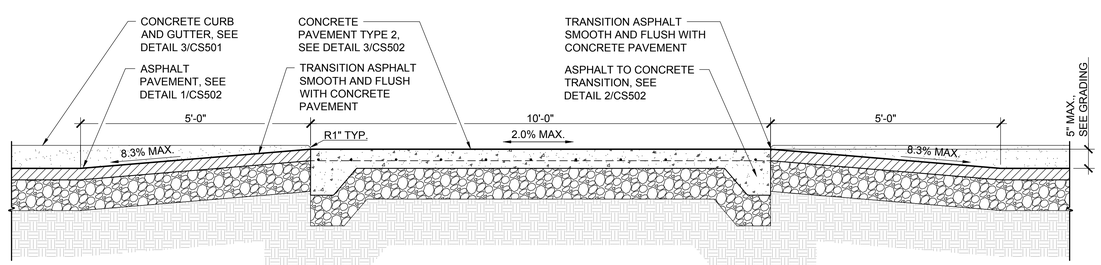

SECTION A
3/4" = 1'-0"

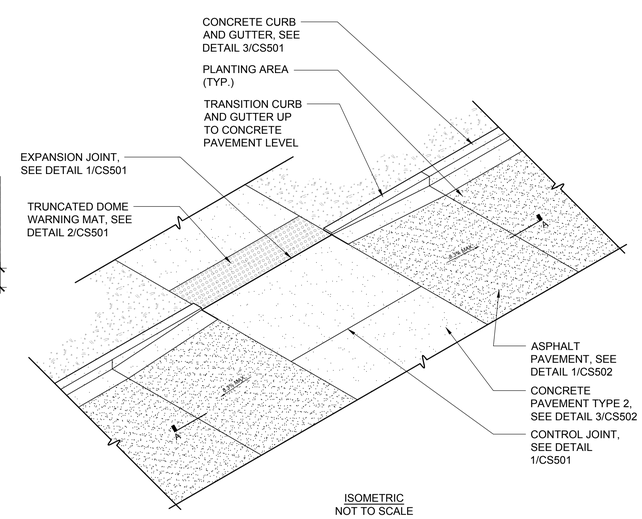

ISOMETRIC
NOT TO SCALE

1 RAISED CONCRETE CROSSWALK SCALE: 1" = 1'-0"

UNCW
UNIVERSITY of NORTH CAROLINA WILMINGTON
601 S COLLEGE ROAD
WILMINGTON, NORTH CAROLINA 28403

PARKING DECK II AND SURFACE PARKING (DESIGN-BUILD)
SOUTH CAMPUS - 4965 RIEGEL ROAD

SCO ID NUMBER: 18-19226-01A
CODE: 441828
ITEM: 301

CONTRACTOR
Balfour Beatty Construction

DESIGNER

CLARKNEXSEN
1523 ELIZABETH AVENUE, SUITE 300
CHARLOTTE, NORTH CAROLINA 28204
704·377·8800
CLARK NEXSEN LICENSE NUMBER: C-1028

CONSULTANTS

WALKER CONSULTANTS
13860 Ballantyne Corporate Place
Suite 140
Charlotte, NC 28277
T: 704.247.6230
www.walkerconsultants.com
NC License No. F-0518

McKIM&CREED
CIVIL ENGINEER
243 NORTH FRONT STREET
WILMINGTON, NORTH CAROLINA
28401
910.343.1048

CORPORATE SEAL

PROFESSIONAL SEAL
NOT FOR CONSTRUCTION
NORTH CAROLINA PROFESSIONAL ENGINEER SEAL 22805
RICHARD M. COLLINSWORTH

SUBMITTAL
04/15/2019
CONSTRUCTION DOCUMENT SUBMITTAL 01

REVISIONS

KEY PLAN

SHEET
SITE DETAILS

CS503

DESIGN: TRC
DRAWN: TRC
REVIEW: RMC

8/9/2018 4:16:18 PM
S:\49990016\BD\Drawings\CS501_49990016.dwg

NOTES:
A. PAVERS: CONCRETE PRECAST PAVERS, 2 3/8" THICK, SAILOR COURSE, INSTALL PER MANUFACTURER RECOMMENDATIONS
B. PAVERS SHALL BE INSTALLED IN COMPLIANCE WITH ADA GUIDELINES

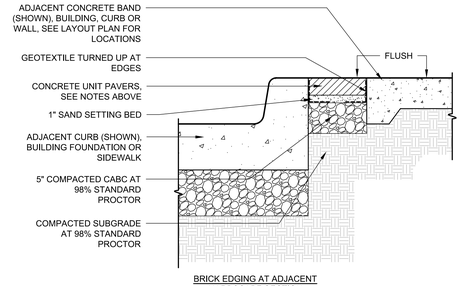

BRICK EDGING AT ADJACENT HARDSCAPE SECTION

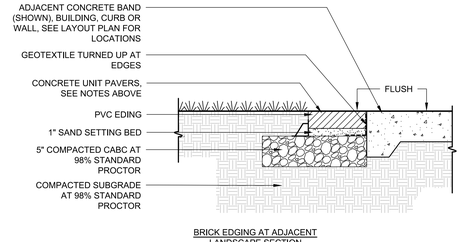

BRICK EDGING AT ADJACENT LANDSCAPE SECTION

1 BRICK BANDING (ALTERNATE #4) SCALE: 1/2" = 1'-0"

UNIVERSITY of NORTH CAROLINA WILMINGTON
601 S COLLEGE ROAD
WILMINGTON, NORTH CAROLINA 28403

PARKING DECK II AND SURFACE PARKING (DESIGN-BUILD)
SOUTH CAMPUS - 4965 RIEGEL ROAD

SCO ID NUMBER: 18-19226-01A
CODE: 441828
ITEM: 301

CONTRACTOR
Balfour Beatty Construction

DESIGNER

CLARKNEXSEN
1523 ELIZABETH AVENUE, SUITE 300
CHARLOTTE, NORTH CAROLINA 28204
704·377·8800
CLARK NEXSEN LICENSE NUMBER: C-1028

CONSULTANTS

WALKER CONSULTANTS
13860 Ballantyne Corporate Place
Suite 140
Charlotte, NC 28277
T: 704.247.6230
www.walkerconsultants.com
NC License No. F-0518

McKIM&CREED
CIVIL ENGINEER
243 NORTH FRONT STREET
WILMINGTON, NORTH CAROLINA
28401
910.343.1048

CORPORATE SEAL

PROFESSIONAL SEAL
NORTH CAROLINA PROFESSIONAL ENGINEER SEAL 22915 RICHARD M. COLLISON
NOT FOR CONSTRUCTION

SUBMITTAL
04/15/2019
CONSTRUCTION DOCUMENT SUBMITTAL 01

REVISIONS

KEY PLAN

SHEET
SITE DETAILS

CS504

DESIGN: TRC
DRAWN: TRC
REVIEW: RMC

8/9/2018 4:16:18 PM
S:\49990016\180\Drawings\CS501_49990016.dwg

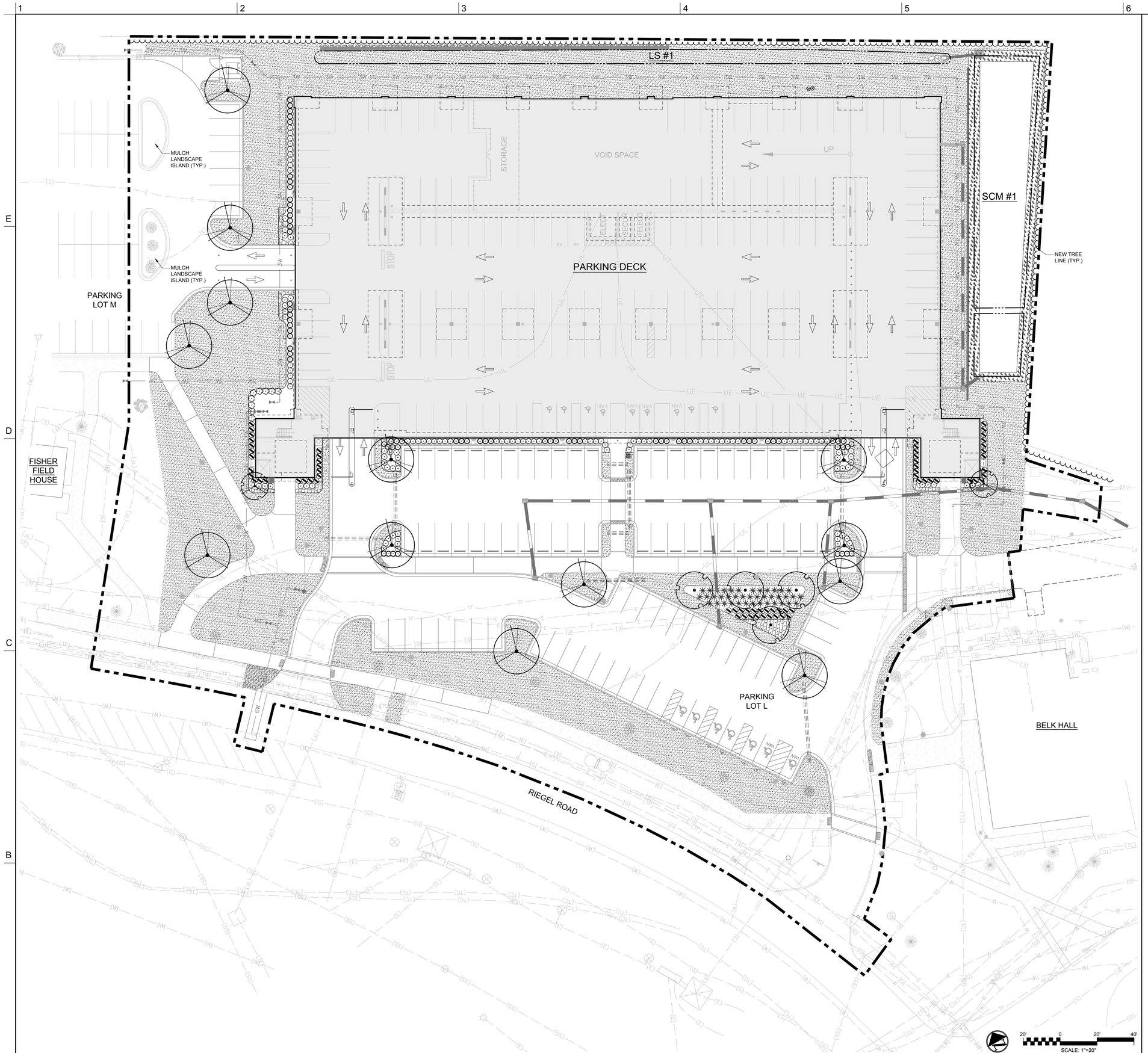

SCALE: 1" = 20'

2 LANDSCAPE PLAN

PLANT LEGEND

TREES	BOTANICAL / COMMON NAME
	ACER RUBRUM 'RED SUNSET' RED SUNSET MAPLE
	LAGERSTROEMIA INDICA 'BYER'S WONDERFUL WHITE' CRAPE MYRTLE
	PRUNUS SERRULATA 'KWANZAN' FLOWERING CHERRY

SHRUBS	BOTANICAL / COMMON NAME
	AZALEA ENCORE 'CORAL' TM ENCORE AZALEA
	ILEX CORNUTA 'CARISSA' CARISSA HOLLY
	ILEX GLABRA 'SHAMROCK' INKBERRY
	ILEX VOMITORIA 'NANA' DWARF YAUPON
	MUHLENBERGIA CAPILLARIS PINK MUHLY
	ROSA X 'NOVAROSPOP' POPCORN DRIFT ROSE

GROUND COVERS	BOTANICAL / COMMON NAME
	CYNODON DACTYLON BERMUDA GRASS
	JUNIPERUS CONFERTA 'BLUE PACIFIC' BLUE PACIFIC JUNIPER
	VEGETATIVE SHELF PLANTING

SCALE: NTS

1 LEGEND/NOTES

UNCW
UNIVERSITY of NORTH CAROLINA WILMINGTON
601 S COLLEGE ROAD
WILMINGTON, NORTH CAROLINA 28403

PARKING DECK II AND SURFACE PARKING (DESIGN-BUILD)
SOUTH CAMPUS - 4965 RIEGEL ROAD

SCO ID NUMBER: 18-19226-01A
CODE: 441828
ITEM: 301

CONTRACTOR
Balfour Beatty Construction

DESIGNER
CLARKNEXSEN
1523 ELIZABETH AVENUE, SUITE 300
CHARLOTTE, NORTH CAROLINA 28204
704·377·8800
CLARK NEXSEN LICENSE NUMBER: C-1028

CONSULTANTS
WALKER CONSULTANTS
13860 Ballantyne Corporate Place
Suite 140
Charlotte, NC 28277
T: 704.247.6230
www.walkerconsultants.com
NC License No. F-0518

McKIM&CREED
CIVIL ENGINEER
243 NORTH FRONT STREET
WILMINGTON, NORTH CAROLINA
28401
910.343.1048

CORPORATE SEAL

PROFESSIONAL SEAL
NOT FOR CONSTRUCTION

SUBMITTAL
04/15/2019
CONSTRUCTION DOCUMENT SUBMITTAL 01

REVISIONS

KEY PLAN

SHEET
LANDSCAPE PLAN

CL100

DESIGN: TRC
DRAWN: TRC
REVIEW: RMC

8/9/2018 4:16:18 PM
S:\49990016\980\Drawings\CL100_49990016.dwg

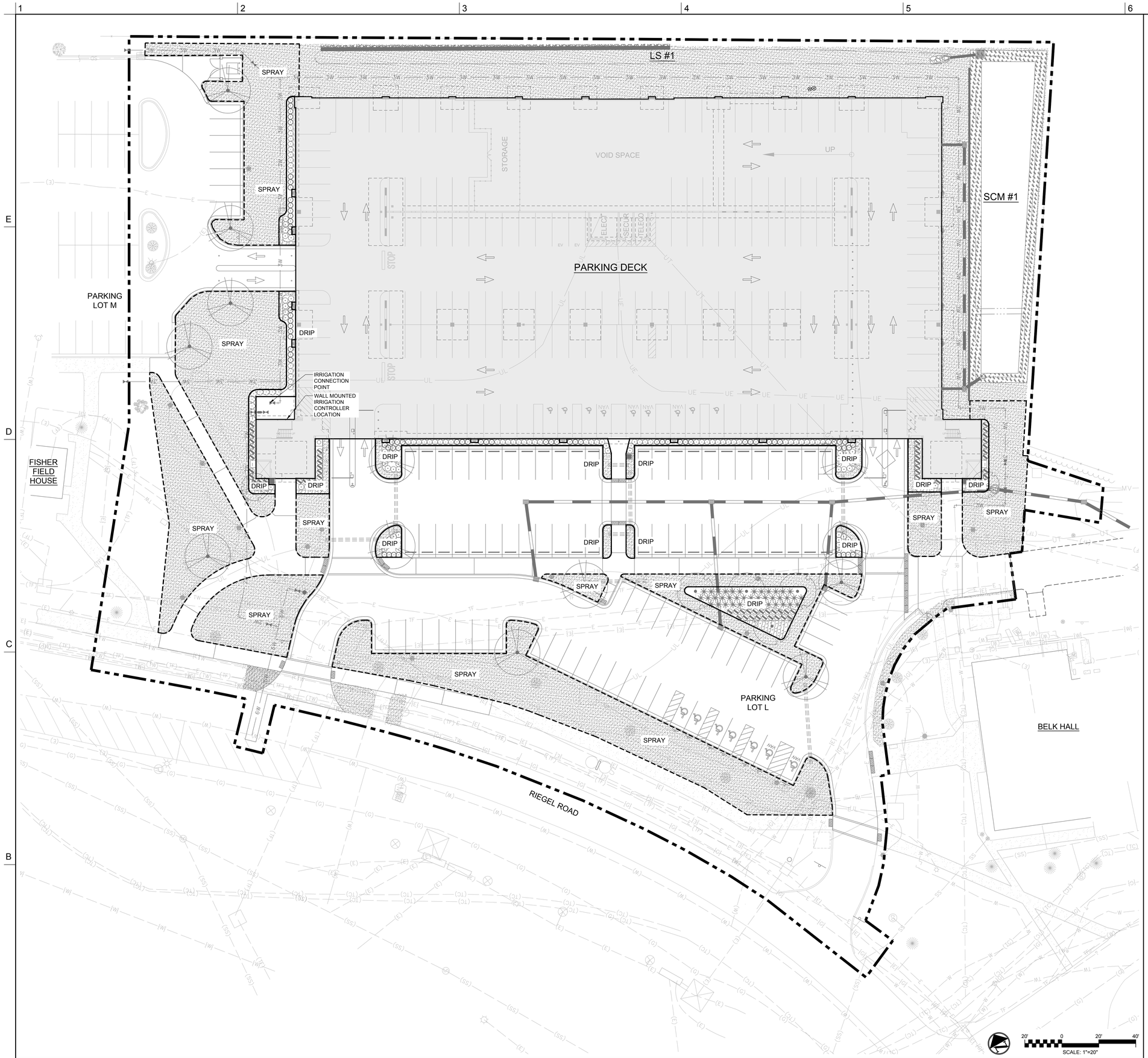

LEGEND

SPRAY	POP-UP SPRAY IRRIGATED AREA (26,500 SF APPROX.)
DRIP	DRIP IRRIGATED AREA (5,100 SF APPROX.)

NOTES

1. THIS IRRIGATION PLAN IS CONCEPTUAL IN NATURE TO ILLUSTRATE AREAS TO BE IRRIGATED AND GENERAL DESIGN PARAMETERS. THE FINAL IRRIGATION SYSTEM WILL BE A DESIGN ASSIST PROCUREMENT METHOD BY THE CONTRACTOR.
2. MAIN LINE AND LATERAL LINES SHALL BE SLEEVED UNDER ALL DRIVEWAYS AND WALKWAY, SEE CG100.
3. VALVE BOXES AND EQUIPMENT INSTALLED ABOVE GRADE SHALL BE PLACED IN PLANTING BEDS WHERE POSSIBLE.
4. TREES SHALL BE IRRIGATION VIA A 2' DIAMETER DRIP LINE RING.
5. TURF AREAS SHALL BE IN SEPARATE ZONES FROM TREES AND SHRUBS .
6. CONTRACTOR TO PROVIDE AS-BUILT DRAWINGS DUE AT FINAL INSPECTIONS.
7. SPRAY HEADS SHALL PROVIDED HEAD TO HEAD COVERAGE.

A 2 IRRIGATION PLAN SCALE: 1" = 20'

1 LEGEND/NOTES SCALE: NTS

UNCW
UNIVERSITY of NORTH CAROLINA WILMINGTON
601 S COLLEGE ROAD
WILMINGTON, NORTH CAROLINA 28403

PARKING DECK II AND SURFACE PARKING (DESIGN-BUILD)
SOUTH CAMPUS - 4965 RIEGEL ROAD

SCO ID NUMBER: 18-19226-01A
CODE: 441828
ITEM: 301

CONTRACTOR
Balfour Beatty Construction

DESIGNER
CLARKNEXSEN
1523 ELIZABETH AVENUE, SUITE 300
CHARLOTTE, NORTH CAROLINA 28204
704·377·8800

CLARK NEXSEN LICENSE NUMBER: C-1028

CONSULTANTS
WALKER CONSULTANTS
13860 Ballantyne Corporate Place
Suite 140
Charlotte, NC 28277
T: 704.247.6230
www.walkerconsultants.com
NC License No. F-0518

McKIM&CREED
CIVIL ENGINEER
243 NORTH FRONT STREET
WILMINGTON, NORTH CAROLINA
28401
910.343.1048

CORPORATE SEAL

PROFESSIONAL SEAL
NOT FOR CONSTRUCTION
NORTH CAROLINA PROFESSIONAL ENGINEER SEAL 22910 RICHARD M. COLLINS

SUBMITTAL
04/15/2019
CONSTRUCTION DOCUMENT SUBMITTAL 01

REVISIONS

KEY PLAN

SHEET
IRRIGATION PLAN

CI100

DESIGN: TRC
DRAWN: TRC
REVIEW: RMC

8/9/2018 4:16:18 PM
S:\49990016\980\Drawings\CI100_49990016.dwg

A. ALL EXISTING VEGETATION THAT IS USED TO MEET LANDSCAPING REQUIREMENTS, ALL REQUIRED PLANTED LIVING MATERIAL, AND ALL REQUIRED BERMS SHALL BE MAINTAINED BY THE OWNER OF THE PROPERTY ON A CONTINUING BASIS. ANY PLANTED MATERIAL WHICH BECOMES DAMAGED OR DISEASED OR DIES SHALL BE REPLACED BY THE OWNER WITHIN 60 DAYS OF THE OCCURRENCE OF SUCH CONDITION. IF, IN THE OPINION OF THE ZONING ADMINISTRATOR THERE ARE SEASONAL CONDITIONS WHICH WILL NOT PERMIT THE TIMELY REPLACEMENT OF THE VEGETATION (E.G. TOO HOT OR TOO COOL FOR SUCCESSFUL REPLANTING) THIS REQUIREMENT MAY BE ADMINISTRATIVELY WAIVED UNTIL A TIME CERTAIN WHEN THE REPLANTING WOULD BE SUCCESSFUL.

B. VERIFICATION OF TOTAL LANDSCAPE MATERIAL QUANTITIES AS SHOWN ON THE LANDSCAPE PLANS AND IN THE PLANT LIST SHALL BE THE RESPONSIBILITY OF THE LANDSCAPE CONTRACTOR. THE LANDSCAPE ARCHITECT SHALL BE NOTIFIED OF ANY DISCREPANCIES PRIOR TO FINAL BIDDING OR INSTALLATION.

C. ALL PLANTING TYPES SHALL COMPLY WITH LOCAL GOVERNING CODES AND REGULATIONS, CONFORM TO REQUIREMENTS OF PLANT LIST AND TO THE AMERICAN ASSOCIATION OF NURSERYMEN "AMERICAN STANDARD OF NURSERY STOCK" AND "HORTICULTURAL STANDARDS" AS TO SPECIES, AGE, SIZE, AND PLANTING RECOMMENDATIONS.

D. LANDSCAPE MATERIAL PLACED IN PREPARED HOLES SHALL BE PROPERLY BACKFILLED PRIOR TO THE END OF THE WORKING DAY.

E. ALL SAUCERS SHALL BE SOAKED WITH WATER AND MULCHED IMMEDIATELY FOLLOWING INSTALLATION.

F. ALL PREPARED GROUND COVER AND ANNUAL BED INSTALLATIONS SHALL BE PROPERLY SOAKED AND MULCHED PRIOR TO THE END OF THE DAY.

G. LANDSCAPE ARCHITECT SHALL APPROVE ANY ON-SITE PLANT STORAGE AREA FOR ACCESSIBILITY, SHADE CONDITIONS, HEALING-IN MULCH MATERIAL AND TEMPORARY WATERING METHODS.

H. ALL ROPE AND WRAPPING TWINE SHALL BE CUT AND REMOVED FROM AROUND THE UPPER PARTS OF THE ROOT BALL. METAL BASKET WIRES AND BURLAP SHALL BE PULLED BACK AND TUCKED UNDER THE EDGES OF THE SAUCER RINGS ON ALL TREES AND LARGE SHRUBS. ALL SYNTHETIC BURLAP SHALL BE REMOVED FROM PLANT BALLS PRIOR TO BACK FILLING.

I. ALL PLANT BEDS OR RAISED SAUCER RINGS SHALL BE EDGED WITH SMOOTH, CONTINUOUS CURVES.

J. ALL PLANT MATERIAL SHALL BE PLANTED AT HEIGHTS AND WIDTHS AS ILLUSTRATED IN PLANTING DETAILS.

K. TREE GUYING SHALL BE PERFORMED WITHIN A WEEK OF PLANTING. THE LANDSCAPE CONTRACTOR SHALL BE RESPONSIBLE FOR REMOVING ALL TREE GUYING STRAPPING AND STAKES AFTER THE FIRST FULL GROWING SEASON OR ONE YEAR, WHICH EVER COMES FIRST.

L. CONTRACTOR SHALL VERIFY LOCATIONS OF UNDERGROUND UTILITIES PRIOR TO PLANTING.

M. ANY EXPOSED OR UNCOVERED LINES SHALL BE SHOWN TO GENERAL CONTRACTOR PRIOR TO BACKFILLING.

N. ALL PLANT BEDS AND RAISED SAUCER RINGS SHALL BE GRADED TO PROVIDE ADEQUATE DRAINAGE AND SHALL BE MULCHED AS SPECIFIED.

O. ALL MATERIALS, PLANTING AND LANDSCAPE WORK SHALL CONFORM TO THE CURRENT MUNICIPAL AUTHORITIES STANDARD SPECIFICATIONS AND DETAILS.

P. ALL LANDSCAPE AREAS THAT ARE NOT PLANTED AND MULCHED OR PAVED SHALL BE SEEDED OR SODDED.

Q. FIRST YEAR PRUNING OF TREE CROWN SHALL BE LIMITED TO REMOVAL OF DEAD & DAMAGED WOOD.

R. TREE PROTECTION FENCE SHALL BE INSTALL. INSPECTED AND APPROVED PRIOR TO CLEARING, GRADING AND CONSTRUCTION ACTIVITY OR ISSUANCE OF ANY RELATED PERMITS. NO CONSTRUCTION WORKERS, TOOLS, MATERIALS OR VEHICLES ARE PERMITTED WITHIN THE TREE PROTECTION FENCING.

S. MULCH LINE SMOOTH CONTINUOUS CURVES. CLEAR OUT FIRST 5' FROM DEBRIS AND UNDERBRUSH AT AREAS OF EXISTING VEGETATION TO REMAIN.

T. ALL TREES NOT WITHIN A PLANT BED TO BE TREATED WITH A 6' DIAMETER MULCH RING TYPICAL, UNLESS OTHERWISE INDICATED ON THE PLANTING PLANS.

U. ALL TREES TO HAVE A MINIMUM 2" CALIPER AT THE TIME OF PLANTING, UNLESS OTHERWISE INDICATED IN THE PLANTING SPECIFICATION. CALIPER TO BE MEASURED 48" ABOVE THE ROOT BALL.

V. TREES SHALL BE LOCATED A MINIMUM OF 5 FEET FROM SEWER/WATER CONNECTIONS OR AS OTHERWISE DICTATED BY LOCAL REGULATIONS. CONTRACTOR SHALL BE LIABLE FOR DAMAGE TO ANY AND ALL PUBLIC OR PRIVATE UTILITIES.

W. SUBSTITUTIONS OF PLANT MATERIALS SPECIFIED CAN ONLY OCCUR WITH PRIOR APPROVAL BY LANDSCAPE ARCHITECT.

X. ESTABLISH PLANT BED CONFIGURATION. LANDSCAPE ARCHITECT TO APPROVE BED LAYOUT IN FIELD.

Y. AREAS DAMAGED BY ACTIVITIES OF CONTRACTOR SHALL BE RE-ESTABLISHED TO PRE-DISTURBANCE CONDITION AT NO ADDITIONAL COST TO THE OWNER.

Z. USE HERBICIDES, PESTICIDES, AND FERTILIZER IN A MANNER CONSISTENT WITH THE FEDERAL INSECTICIDE, FUNGICIDE, AND RODENTICIDE ACT AND IN ACCORDANCE WITH LABEL RESTRICTIONS.

AA. CONTRACTOR SHALL INSURE THAT ALL PLANT MATERIAL IS FREE OF FIRE ANTS PRIOR TO INSTALLATION.

AB. LANDSCAPE ARCHITECT OR OWNER SHALL APPROVE PLACEMENT OF TREES PRIOR TO PLANTING.

6 GENERAL LANDSCAPE NOTES

SCALE: NTS

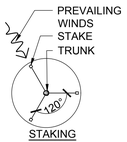

STAKING PLAN

GENERAL NOTES:
A. TREE TO BE STRAIGHTENED PRIOR TO BACKFILL AND GUYING
B. SCARIFY BOTTOM AND SIDES OF PLANT PIT.
C. STAKE AND GUY TREES 3" CALIPER OR GREATER, OR TREES IN WINDING LOCATIONS AS DIRECTED BY LANDSCAPE ARCHITECT.
D. DO NOT WRAP TREE TRUNK.
E. MARK NORTH SIDE OF TREE AT NURSERY AND PLANT WITH MARKING FACING NORTH.
F. BACKFILL PLANTING PITS WITH TOPSOIL MIXTURE AS SPECIFIED, PACK SOIL AROUND BASE OF ROOTBALL TO STABILIZE, INSTALL REMAINDER IN 9" LAYERS, HAND TAMP TO REMOVE VOIDS AND WATER EACH LAYER

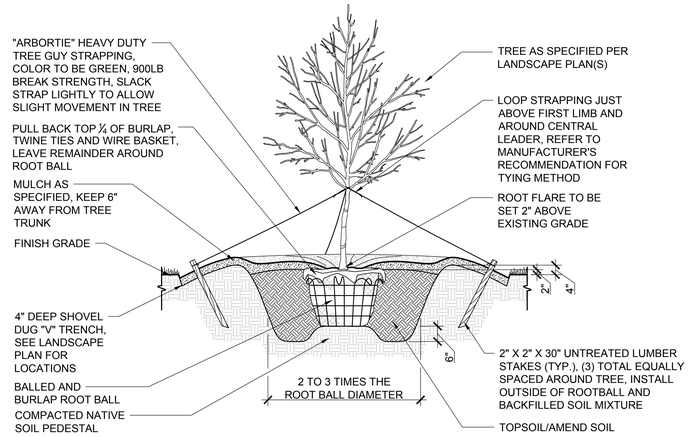

SECTION

5 TYPICAL TREE PLANTING

SCALE: 1/2" = 1'-0"

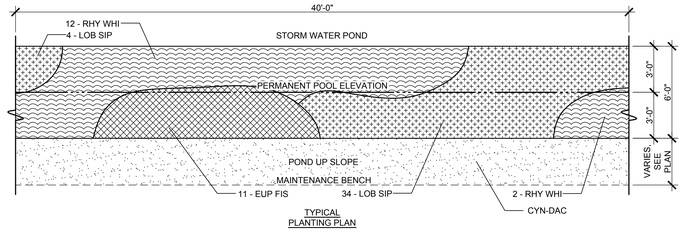

TYPICAL PLANTING PLAN

TYPICAL PLANTING SCHEDULE PER 40' LF

SUBMERSIBLE	CODE	BOTANICAL NAME	COMMON NAME	SIZE	HEIGHT	SPACING	QTY
	EUP FIS	EUPATORIADELPHUS FISTULOSUS	JOE PYE WEED	1 GAL.	18"-24" HT.	30" O.C.	8
	LOB SIP	LOBELIA SIPHILITICA	GREAT LOBELIA	5" DEEP PLUG	12"-18" HT.	18" O.C.	38
	RHY WHI	RHYNCHOSPORA COLORATA	STARRUSH WHITETOP	4" POT	12"-18" HT.	36" O.C.	14

GROUND COVERS	CODE	BOTANICAL NAME	COMMON NAME	SIZE	SPACING	QTY
	CYN DAC	CYNODON DACTYLON	BERMUDA GRASS	SEED	3 LBS / 1000 SF	SEE PLAN

3 VEGETATIVE SHELF PLANTING

SCALE: 1/2" = 1'-0"

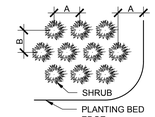

PLANT SPACING PLAN

PLANT SPACING CHART

SPACING (A)	ROW OFFSET (B)	SPACING (A)	ROW OFFSET (B)
1'-0" O.C.	10" O.C.	5'-0" O.C.	4'-4" O.C.
1'-6" O.C.	1'-4" O.C.	6'-0" O.C.	5'-2" O.C.
2'-0" O.C.	1'-9" O.C.	7'-0" O.C.	6'-1" O.C.
2'-6" O.C.	2'-2" O.C.	8'-0" O.C.	6'-11" O.C.
3'-0" O.C.	2'-7" O.C.	9'-0" O.C.	7'-10" O.C.
3'-6" O.C.	3'-0" O.C.	10'-0" O.C.	8'-8" O.C.
4'-0" O.C.	3'-6" O.C.		

GENERAL NOTES:
A. SCARIFY BOTTOM AND SIDES OF PLANTING PIT.
B. THE BOTTOM OF SHRUB ROOT BALLS SHALL NOT PROJECT INTO THE NATIVE SUBGRADE . LARGER PLANTS WILL REQUIRE ADDITIONAL TOPSOIL DEPTH.
C. BACKFILL PLANTING PITS WITH TOPSOIL MIXTURE AS SPECIFIED, INSTALL IN 6" LAYERS, HAND TAMP TO REMOVE VOIDS AND WATER EACH LAYER
D. ALL ROOT BALLS REMOVED FROM CONTAINERS SHALL BE SCARIFIED BY HAND PRIOR TO PLACEMENT AND BACKFILLING WITH PREPARED SOILS. HAND TOOLS SHALL NOT BE USED TO SCARIFY ROOT BALLS.
E. REFER TO GRADING PLANS FOR MOUND HEIGHTS.

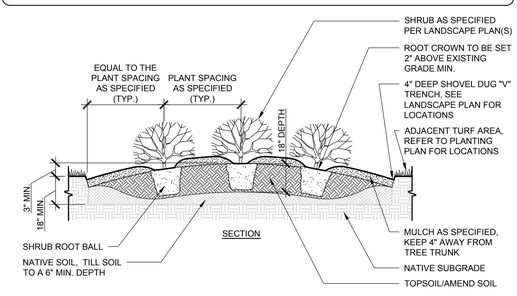

SECTION

2 TYPICAL SHRUB PLANTING

SCALE = 1/2" = 1'-0"

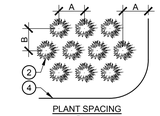

PLANT SPACING PLAN

PLANT SPACING CHART

SPACING (A)	ROW OFFSET (B)	SPACING (A)	ROW OFFSET (B)
6" O.C.	5" O.C.	24" O.C.	1'-9" O.C.
8" O.C.	7" O.C.	36" O.C.	2'-7" O.C.
12" O.C.	10" O.C.	4'-0" O.C.	3'-6" O.C.
15" O.C.	1'-1" O.C.	5'-0" O.C.	4'-4" O.C.
18" O.C.	1'-4" O.C.	6'-0" O.C.	5'-2" O.C.

GENERAL NOTES:
A. SCARIFY BOTTOM AND SIDES OF PLANTING PIT.
B. THE BOTTOM OF GROUND COVER ROOT BALLS SHALL NOT PROJECT INTO THE NATIVE SUBGRADE . LARGER PLANTS WILL REQUIRE ADDITIONAL TOPSOIL DEPTH.
C. BACKFILL PLANTING PITS WITH TOPSOIL MIXTURE AS SPECIFIED, INSTALL IN 6" LAYERS, HAND TAMP TO REMOVE VOIDS AND WATER EACH LAYER
D. ALL ROOT BALLS REMOVED FROM CONTAINERS SHALL BE SCARIFIED BY HAND PRIOR TO PLACEMENT AND BACKFILLING WITH PREPARED SOILS. HAND TOOLS SHALL NOT BE USED TO SCARIFY ROOT BALLS.
E. REFER TO GRADING PLANS FOR MOUND HEIGHTS.

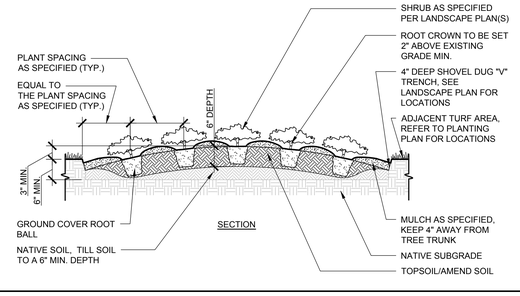

SECTION

1 GROUND COVER PLANTING

SCALE: 1/2" = 1'-0

PLANT SCHEDULE

TREES	BOTANICAL NAME	COMMON NAME	SIZE	CALIPER	HEIGHT	QTY	REMARKS
	ACER RUBRUM `RED SUNSET`	RED SUNSET MAPLE	B & B	3" CAL.	12`-14` HT.	13	UNIFORM HEAD & MATCHED
	LAGERSTROEMIA INDICA `BYER`S WONDERFUL WHITE`	CRAPE MYRTLE	B & B	2" CAL.	8`-10` HT.	2	UNIFORM HEAD & MATCHED, 3 TRU
	PRUNUS SERRULATA `KWANZAN`	FLOWERING CHERRY	B & B	2" CAL.	8`-10` HT.	4	UNIFORM HEAD & MATCHED

SHRUBS	BOTANICAL NAME	COMMON NAME	SIZE	HEIGHT	SPREAD	SPACING	QTY	REMARKS
	AZALEA ENCORE `CORAL` TM	ENCORE AZALEA	3 GAL.	18"-24" HT.	18"-24" SPD.	3` O.C.	56	UNIFORM HEAD & MATCHED
	ILEX CORNUTA `CARISSA`	CARISSA HOLLY	3 GAL.	18"-24" HT.	18"-24" SPD.	3` O.C.	71	UNIFORM HEAD & MATCHED
	ILEX GLABRA `SHAMROCK`	INKBERRY	3 GAL.	15"-18" HT.	15"-18" SPD.	3` O.C.	9	UNIFORM HEAD & MATCHED
	ILEX VOMITORIA `NANA`	DWARF YAUPON	3 GAL.	12"-15" HT.	12"-15" SPD.	2.5` O.C.	66	UNIFORM HEAD & MATCHED
	MUHLENBERGIA CAPILLARIS	PINK MUHLY	3 GAL.	18"-24" HT.	18"-24" SPD.	4` O.C.	40	UNIFORM HEAD & MATCHED
	ROSA X `NOVAROSPOP`	POPCORN DRIFT ROSE	3 GAL.	15"-18" HT.	15"-18" SPD.	3` O.C.	64	UNIFORM HEAD & MATCHED

GROUND COVERS	BOTANICAL NAME	COMMON NAME	SIZE	SPACING	SPACING	QTY	REMARKS
	CYNODON DACTYLON	BERMUDA GRASS	SOD			41,693 SF	
	JUNIPERUS CONFERTA `BLUE PACIFIC`	BLUE PACIFIC JUNIPER	1 GAL.	48" O.C.	48" o.c.	28	MATCHED
	VEGETATIVE SHELF PLANTING	-	-	-		2,340 SF	SEE VEGETATIVE SHELF PLANTING

4 PLANT SCHEDULE

SCALE: 1/2" = 1'-0

8/9/2018 4:16:18 PM
S:\49990016\80-Drawings\CL501_49990016.dwg

UNCW
UNIVERSITY of NORTH CAROLINA WILMINGTON
601 S COLLEGE ROAD
WILMINGTON, NORTH CAROLINA 28403

PARKING DECK II AND SURFACE PARKING (DESIGN-BUILD)
SOUTH CAMPUS - 4965 RIEGEL ROAD

SCO ID NUMBER: 18-19226-01A
CODE: 441828
ITEM: 301

CONTRACTOR
Balfour Beatty Construction

DESIGNER

CLARKNEXSEN
1523 ELIZABETH AVENUE, SUITE 300
CHARLOTTE, NORTH CAROLINA 28204
704·377·8800
CLARK NEXSEN LICENSE NUMBER: C-1028

CONSULTANTS

WALKER CONSULTANTS
13860 Ballantyne Corporate Place
Suite 140
Charlotte, NC 28277
T: 704.247.6230
www.walkerconsultants.com
NC License No. F-0518

McKIM&CREED
CIVIL ENGINEER
243 NORTH FRONT STREET
WILMINGTON, NORTH CAROLINA
28401
910.343.1048

CORPORATE SEAL

PROFESSIONAL SEAL
NOT FOR CONSTRUCTION

SUBMITTAL
04/15/2019
CONSTRUCTION DOCUMENT SUBMITTAL 01

REVISIONS

KEY PLAN

SHEET
LANDSCAPE DETAILS

CL501

DESIGN: TRC
DRAWN: TRC
REVIEW: RMC

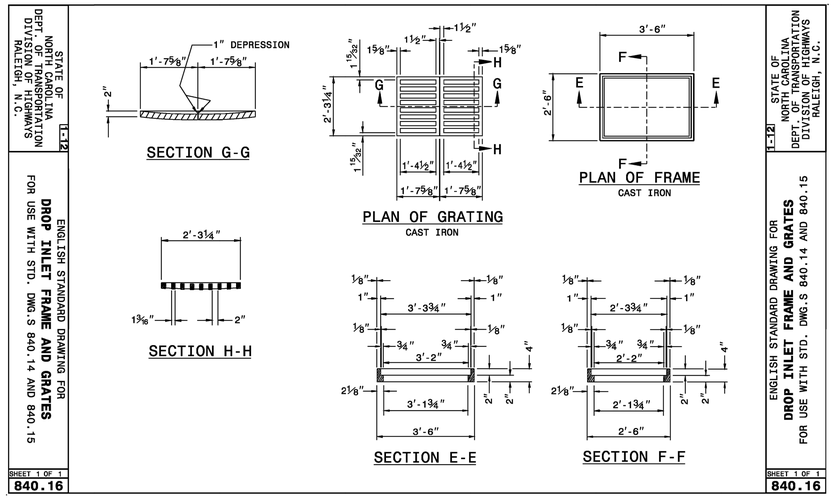

4 DROP INLET FRAME AND GRATES NTS

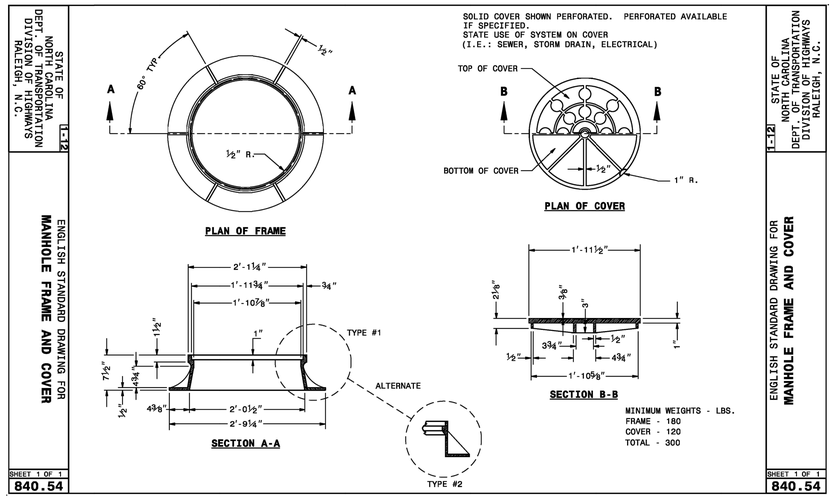

3 MANHOLE FRAME AND COVER NTS

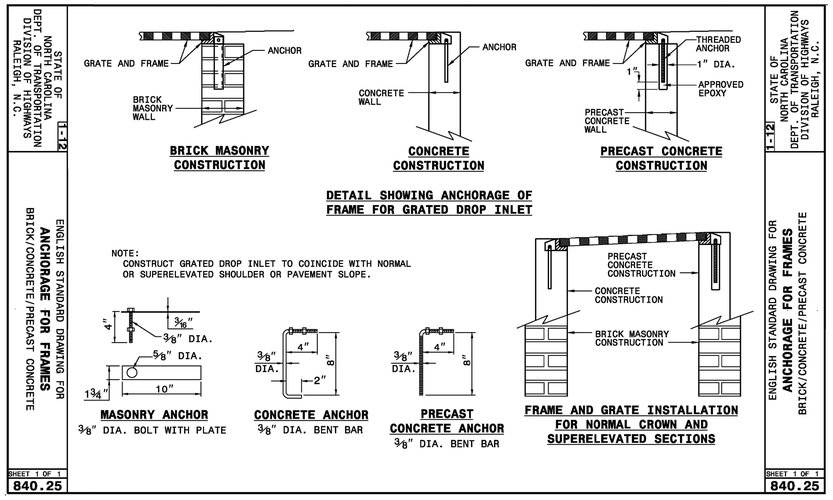

6 ANCHORAGE FOR FRAMES NTS

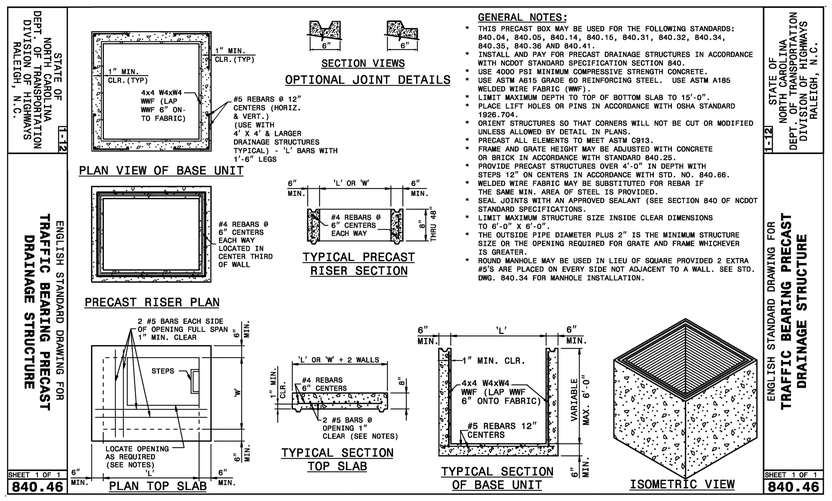

5 TRAFFIC BEAR PRECAST DRAINAGE STRUCTURE NTS

STORM DRAINAGE BEDDING NOTES

1. EXCAVATION FOR STORM DRAINAGE PIPE SHALL BE TO THE LINES AND GRADES AS SHOWN ON THE PLANS.
2. THE BEDDING SHALL BE SHAPED IN ACCORDANCE WITH CLASS "C" BEDDING.
3. THE BEDDING SHALL PROVIDE A FIRM FOUNDATION OF UNIFORM DENSITY ALONG THE ENTIRE LENGTH OF PIPE. RECESSES SHALL BE MADE TO ACCOMMODATE BELLS AND JOINTS.
4. WHERE UNSTABLE SOILS ARE ENCOUNTERED AS DETERMINED BY GEOTECHNICAL ENGINEER, A MINIMUM 4-INCH THICK BEDDING OF STONE SHALL BE PLACED.
5. THE STONE SHALL BE UNIFORMLY GRADED FROM 3/4 INCH TO NO. 4 IN ACCORDANCE WITH ASTM C-33. CARE SHALL BE TAKEN TO PREVENT UNDERCUTTING IN SUITABLE SOIL.
6. AREAS UNDERCUT SHALL BE FILLED WITH SUITABLE SOIL AND COMPACTED TO 95% OF MAXIMUM DENSITY AT OPTIMUM MOISTURE CONTENT AS DETERMINED BY ASTM D 1557 STANDARD TEST METHOD.

STORM DRAINAGE NOTES:

1. ALL PIPE BEDDING SHALL BE CLASS "C" UNLESS OTHERWISE DIRECTED BY THE ENGINEER.
2. ALL STORM DRAINAGE PIPES SHALL BE HDPE UNLESS OTHERWISE NOTED ON THE PLANS.
3. DO NOT PLANT TREES WITHIN UTILITY AND DRAINAGE EASEMENTS.
4. THE ENGINEER AND THE CONTRACTOR SHALL INSPECT ALL EXISTING PIPES USED IN THE FINAL DRAINAGE SYSTEM AND AGREE ON THE CONDITION OF THE PIPES PRIOR TO CONSTRUCTION. IF DAMAGE OCCURS TO THESE PIPES DURING CONSTRUCTION, THE CONTRACTOR SHALL BE RESPONSIBLE FOR THE REPAIR OR REPLACEMENT OF THE PIPE(S).
5. THE CONTRACTOR SHALL CONTACT NC 811 BEFORE COMMENCING ANY WORK. THE CONTRACTOR SHALL ALSO OBTAIN A UNCW DIG PERMIT. THE CONTRACTOR SHALL VERIFY THE LOCATION OF ALL UNDERGROUND UTILITIES WHETHER INDICATED ON THE DRAWINGS OR NOT. THE CONTRACTOR WILL ASSURE THE PRESENCE ONSITE OF A REPRESENTATIVE OF THE GAS COMPANY WHEN WORKING IN THE VICINITY OF ANY GAS MAINS.

2 STORM DRAINAGE NOTES NTS

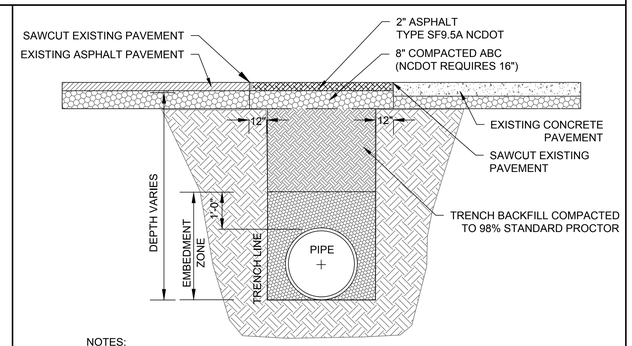

NOTES:

* BACKFILL TO BE INSTALLED IN 6" LIFTS (MAXIMUM) AND COMPACTED TO A MINIMUM DENSITY OF 95% AS DETERMINED BY THE MODIFIED A.A.S.H.T.O. STANDARD METHOD T-99
* CUT - BACK TO BE PREPARED AFTER TRENCH BACKFILLING AND COMPACTION

STANDARD SHOWING METHOD MAKING PAVEMENT REPAIRS WHERE PIPE IS INSTALLED

1 PAVEMENT REPAIR DETAIL NTS

UNCW
UNIVERSITY of NORTH CAROLINA WILMINGTON
601 S COLLEGE ROAD
WILMINGTON, NORTH CAROLINA 28403

PARKING DECK II AND SURFACE PARKING (DESIGN-BUILD)
SOUTH CAMPUS - 4965 RIEGEL ROAD

SCO ID NUMBER: 18-19226-01A
CODE: 441828
ITEM: 301

CONTRACTOR
Balfour Beatty Construction

DESIGNER

CLARKNEXSEN
1523 ELIZABETH AVENUE, SUITE 300
CHARLOTTE, NORTH CAROLINA 28204
704·377·8800
CLARK NEXSEN LICENSE NUMBER: C-1028

CONSULTANTS

WALKER CONSULTANTS
13860 Ballantyne Corporate Place
Suite 140
Charlotte, NC 28277
T: 704.247.6230
www.walkerconsultants.com
NC License No. F-0518

McKIM&CREED
CIVIL ENGINEER
243 NORTH FRONT STREET
WILMINGTON, NORTH CAROLINA
28401
910.343.1048

CORPORATE SEAL

PROFESSIONAL SEAL
NORTH CAROLINA PROFESSIONAL ENGINEER SEAL 22905 RICHARD M COLLINSON

SUBMITTAL
04/15/2019
CONSTRUCTION DOCUMENT SUBMITTAL 01

REVISIONS

KEY PLAN

SHEET
STORM DRAINAGE DETAILS

CG501

DESIGN: TRC
DRAWN: TRC
REVIEW: RMC

8/9/2018 4:16:18 PM
S:\4899\0016\80-Drawings\CC501_4999001б.dwg

STATE OF NORTH CAROLINA DEPT. OF TRANSPORTATION DIVISION OF HIGHWAYS RALEIGH, N.C.

1-12

ENGLISH STANDARD DRAWING FOR **CONCRETE CATCH BASIN** 12" THRU 54" PIPE

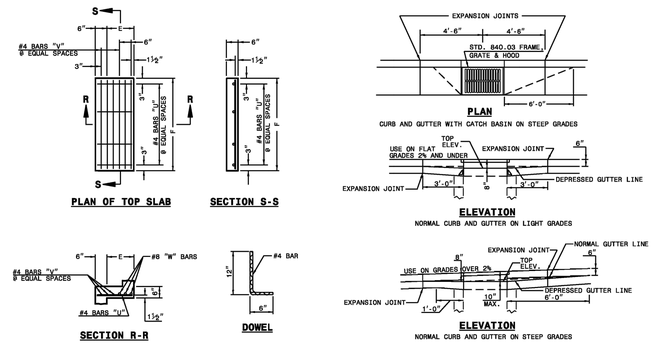

MINIMUM DIMENSIONS AND QUANTITIES FOR CONCRETE CATCH BASIN(BASED ON MIN. HEIGHT, H, WITH NO RISER) *

DIMENSIONS OF BOX AND PIPE						COVER DIMENSION		BARS-U		BARS-V		BARS-W		TOTAL LBS.	CU. YDS. CONC. IN BOX			DEDUCTIONS ONE PIPE	
PIPE D	SPAN A	WIDTH B	WIDTH C	SPAN G	MIN. HEIGHT H	E	F	NO.	LENGTH	NO.	LENGTH	NO.	LENGTH		TOP SLAB	BOTTOM SLAB	WT. CONC. IN WALL HIGH H	C.M.	R.C.
12"	3'-0"	2'-2"	--	--	2'-9"	--	--	--	--	--	--	--	--	--	0.235	0.772	0.015	0.026	
15"	3'-0"	2'-2"			3'-0"										0.235	0.829	0.023	0.036	
18"	3'-0"	2'-2"			3'-3"										0.235	0.887	0.033	0.049	
24"	3'-0"	2'-2"			3'-9"										0.235	1.001	0.059	0.085	
30"	3'-0"	2'-2"	3'-4"		4'-3"	1'-2"	4'-0"	4	1'-5"	2	3'-9"	3	3'-9"	39	0.123	0.931	1.433	0.092	0.127
36"	3'-0"	2'-2"	3'-10"		4'-9"	1'-8"	4'-0"	4	1'-11"	3	3'-9"	3	3'-9"	43	0.161	0.958	1.714	0.132	0.178
42"	3'-0"	2'-2"		4'-5"	5'-3"	1'-5"	3'-2"	4	1'-8"	2	2'-11"	3	2'-11"	32	0.112	0.318	1.738	0.180	0.243
48"	3'-0"	2'-2"		5'-0"	5'-9"	2'-0"	3'-2"	4	2'-3"	3	2'-11"	3	2'-11"	35	0.140	0.352	2.052	0.235	0.317
54"	3'-0"	2'-2"		5'-7"	6'-3"	2'-7"	3'-2"	4	2'-10"	5	2'-11"	3	2'-11"	41	0.160	0.386	2.387	0.297	0.401

* RISER HAS .228 CUBIC YAROS OF CONCRETE PER FOOT HEIGHT

SHEET 2 OF 2 — 840.02

STATE OF NORTH CAROLINA DEPT. OF TRANSPORTATION DIVISION OF HIGHWAYS RALEIGH, N.C.

1-12

ENGLISH STANDARD DRAWING FOR **CONCRETE CATCH BASIN** 12" THRU 54" PIPE

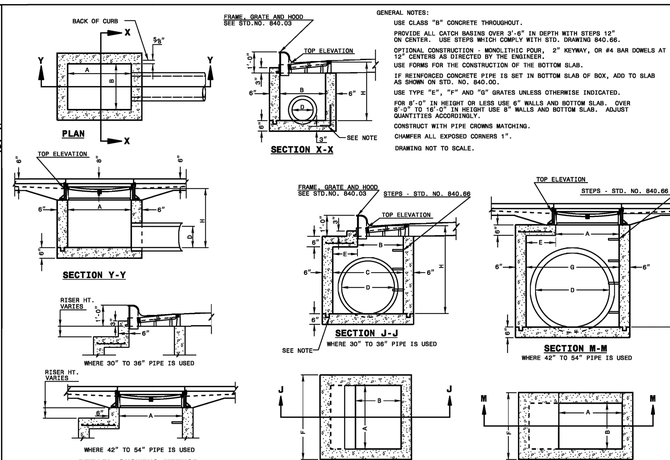

GENERAL NOTES:

USE CLASS "B" CONCRETE THROUGHOUT.

PROVIDE ALL CATCH BASINS OVER 3'-6" IN DEPTH WITH STEPS 12" ON CENTER. USE STEPS WHICH COMPLY WITH STD. DRAWING 840.66.

OPTIONAL CONSTRUCTION - MONOLITHIC FOUR, 2" KEYWAY, OR #4 BAR DOWELS AT 12" CENTERS AS DIRECTED BY THE ENGINEER.

USE FORMS FOR THE CONSTRUCTION OF THE BOTTOM SLAB.

IF REINFORCED CONCRETE PIPE IS SET IN BOTTOM SLAB OF BOX, ADD TO SLAB AS SHOWN ON STD. NO. 840.00.

USE TYPE "E", "F" AND "G" GRATES UNLESS OTHERWISE INDICATED.

FOR 5'-0" IN HEIGHT OR LESS USE 6" WALLS AND BOTTOM SLAB. OVER 5'-0" TO 16'-0" IN HEIGHT USE 8" WALLS AND BOTTOM SLAB. ADJUST QUANTITIES ACCORDINGLY.

CONSTRUCT WITH PIPE CROWNS MATCHING.

CHAMFER ALL EXPOSED CORNERS 1".

DRAWING NOT TO SCALE.

SHEET 1 OF 2 — 840.02

4 CONCRETE CATCH BASIN — NTS

STATE OF NORTH CAROLINA DEPT. OF TRANSPORTATION DIVISION OF HIGHWAYS RALEIGH, N.C.

1-12

ENGLISH STANDARD DRAWING FOR **FRAME, GRATES, AND HOOD** FOR USE ON STANDARD CATCH BASIN

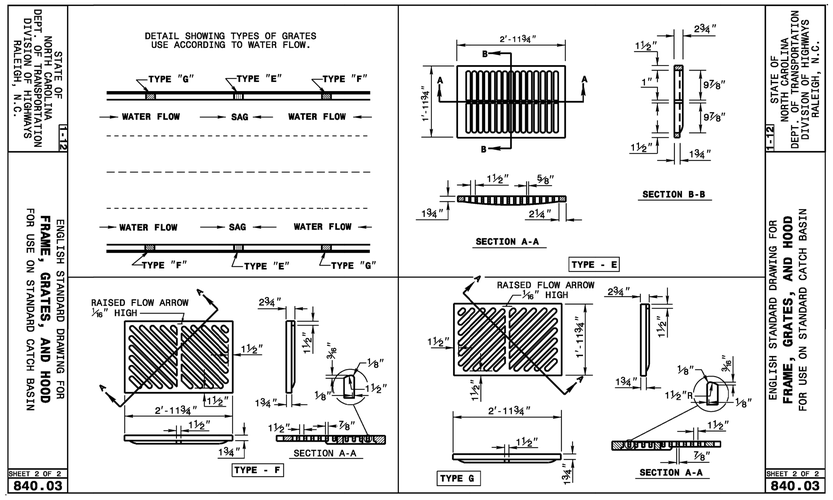

SHEET 2 OF 2 — 840.03

STATE OF NORTH CAROLINA DEPT. OF TRANSPORTATION DIVISION OF HIGHWAYS RALEIGH, N.C.

1-12

ENGLISH STANDARD DRAWING FOR **FRAME, GRATES, AND HOOD** FOR USE ON STANDARD CATCH BASIN

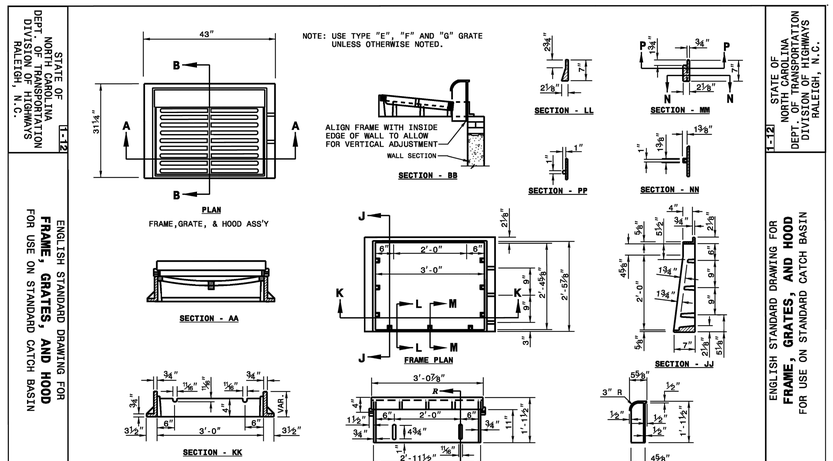

NOTE: USE TYPE "E", "F" AND "G" GRATE UNLESS OTHERWISE NOTED.

ALIGN FRAME WITH INSIDE EDGE OF WALL TO ALLOW FOR VERTICAL ADJUSTMENT

SHEET 1 OF 2 — 840.03

2 FRAME GRATES AND HOOD — NTS

STATE OF NORTH CAROLINA DEPT. OF TRANSPORTATION DIVISION OF HIGHWAYS RALEIGH, N.C.

1-12

ENGLISH STANDARD DRAWING FOR **CONCRETE DROP INLET** 12" THRU 30" PIPE

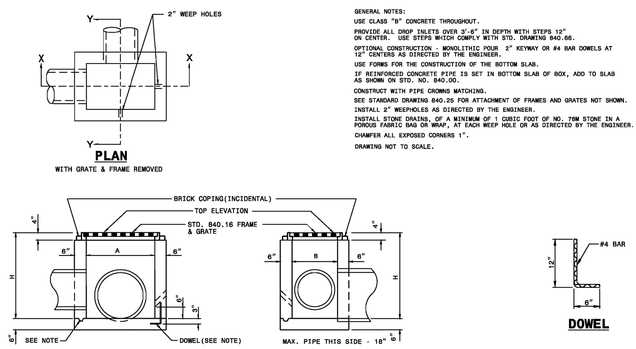

GENERAL NOTES:

USE CLASS "B" CONCRETE THROUGHOUT.

PROVIDE ALL DROP INLETS OVER 3'-6" IN DEPTH WITH STEPS 12" ON CENTER. USE STEPS WHICH COMPLY WITH STD. DRAWING 840.66.

OPTIONAL CONSTRUCTION - MONOLITHIC FOUR 2" KEYWAY OR #4 BAR DOWELS AT 12" CENTERS AS DIRECTED BY THE ENGINEER.

USE FORMS FOR THE CONSTRUCTION OF THE BOTTOM SLAB.

IF REINFORCED CONCRETE PIPE IS SET IN BOTTOM SLAB OF BOX, ADD TO SLAB AS SHOWN ON STD. NO. 840.00.

CONSTRUCT WITH PIPE CROWNS MATCHING.

SEE STANDARD DRAWING 840.25 FOR ATTACHMENT OF FRAMES AND GRATES NOT SHOWN.

INSTALL 2" WEEPHOLES AS DIRECTED BY THE ENGINEER.

INSTALL STONE DRAINS, OF A MINIMUM OF 1 CUBIC FOOT OF NO. 78M STONE IN A POROUS FABRIC BAG OR WRAP, AT EACH WEEP HOLE OR AS DIRECTED BY THE ENGINEER.

CHAMFER ALL EXPOSED CORNERS 1".

DRAWING NOT TO SCALE.

DIMENSIONS AND QUANTITIES FOR DROP INLET(BASED ON MIN. HEIGHT, H)

DIMENSIONS OF BOX & PIPE				CUBIC YARDS CONC. IN BOX			DEDUCTIONS FOR ONE PIPE	
PIPE D	SPAN A	WIDTH B	MIN. HEIGHT H	BOTTOM SLAB	WALL PER FT. HT.	TOTAL WITH MIN. HEIGHT H	C.M.	R.C.
12"	3'-0"	2'-0"	2'-0"	0.222	0.222	0.592	0.015	0.026
15"	/	/	2'-3"			0.648	0.023	0.036
18"	/	/	2'-6"			0.703	0.033	0.049
24"	/	/	3'-0"	/	/	0.814	0.059	0.085
30"	3'-0"	2'-0"	3'-6"	0.222	0.222	0.925	0.092	0.127

SHEET 1 OF 1 — 840.14

1 CONCRETE DROP INLET — NTS

STATE OF NORTH CAROLINA DEPT. OF TRANSPORTATION DIVISION OF HIGHWAYS RALEIGH, N.C.

ENGLISH STANDARD DRAWING FOR **FLARED END SECTION OUTLET**

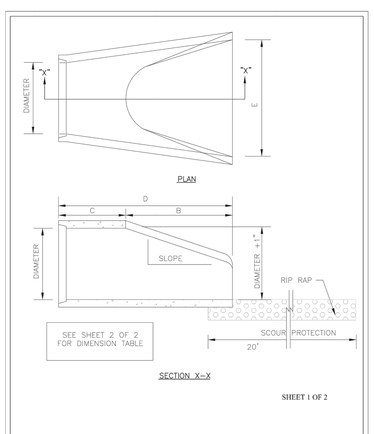

SHEET 1 OF 2

STANDARD DETAIL — FLARED END SECTION OUTLET

DATE: 2001 — DRAWN BY: JSR/CMR — CHECKED BY: B.P., P.E. — SCALE: NOT TO SCALE

CITY OF WILMINGTON ENGINEERING OFFICE 305 CHESTNUT STREET PO. BOX 1810 WILMINGTON N.C. 28402 (910) 341-7807 — SD 1-17

NOTE:

1. STRUCTURAL DESIGN OF END SECTION SHALL CONFORM WITH THAT OF STANDARD REINFORCED CONCRETE.

PIPE DIAMETER	WALL THICKNESS	SLOPE	B	C	D	E	UNIT WEIGHT
12	2 1/4	3:1	24	49	73	24	730
15	2 1/4	3:1	27	46	73	30	910
18	2 1/2	3:1	27	46	73	36	1190
21	2 3/4	3:1	36	37	73	42	1370
24	3	3:1	42	31 1/2	73 1/2	48	1770
27	3 1/4	3:1	48	25 1/2	73 1/2	54	2130
30	3 1/2	3:1	54	19 3/4	73 3/4	60	2380
33	3 3/4	3:1	60	36	96	66	3870
36	4	3:1	63	34 3/4	97 3/4	72	5320
42	4 1/2	3:1	63	35	98	78	5920
48	5	3:1	72	26	98	84	7470
54	5 1/2	2.4:1	66	34	100	90	8810
60	6	2:1	60	39	99	96	11180
72	7	2:1	78	21	99	108	13980

DIMENSIONS IN INCHES WEIGHTS IN POUNDS

SHEET 2 OF 2

STANDARD DETAIL — FLARED END SECTION OUTLET DIMENSION TABLE

DATE: 2001 — DRAWN BY: JSR/CMR — CHECKED BY: B.P., P.E. — SCALE: NOT TO SCALE

CITY OF WILMINGTON ENGINEERING OFFICE PO BOX 1810 WILMINGTON, NC 28402 (910) 341-7807 — SD 1-17

3 FLARED END SECTION — NTS

8/9/2018 4:16:18 PM
S:\4999900180\Drawings\CG501_49990016.dwg

UNCW
UNIVERSITY of NORTH CAROLINA WILMINGTON
601 S COLLEGE ROAD
WILMINGTON, NORTH CAROLINA 28403

PARKING DECK II AND SURFACE PARKING (DESIGN-BUILD)
SOUTH CAMPUS - 4965 RIEGEL ROAD

SCO ID NUMBER: 18-19226-01A
CODE: 441828
ITEM: 301

CONTRACTOR
Balfour Beatty Construction

DESIGNER

CLARKNEXSEN
1523 ELIZABETH AVENUE, SUITE 300
CHARLOTTE, NORTH CAROLINA 28204
704-377-8800
CLARK NEXSEN LICENSE NUMBER: C-1028

CONSULTANTS

WALKER CONSULTANTS
13860 Ballantyne Corporate Place
Suite 140
Charlotte, NC 28277
T: 704.247.6230
www.walkerconsultants.com
NC License No. F-0518

McKIM&CREED
CIVIL ENGINEER
243 NORTH FRONT STREET
WILMINGTON, NORTH CAROLINA
28401
910.343.1048

CORPORATE SEAL

PROFESSIONAL SEAL
NORTH CAROLINA PROFESSIONAL SEAL 22013 ENGINEER RICHARD M COLLIER

SUBMITTAL
04/15/2019
CONSTRUCTION DOCUMENT SUBMITTAL 01

REVISIONS

KEY PLAN

SHEET
STORM DRAINAGE DETAILS

CG502

DESIGN: TRC
DRAWN: TRC
REVIEW: RMC

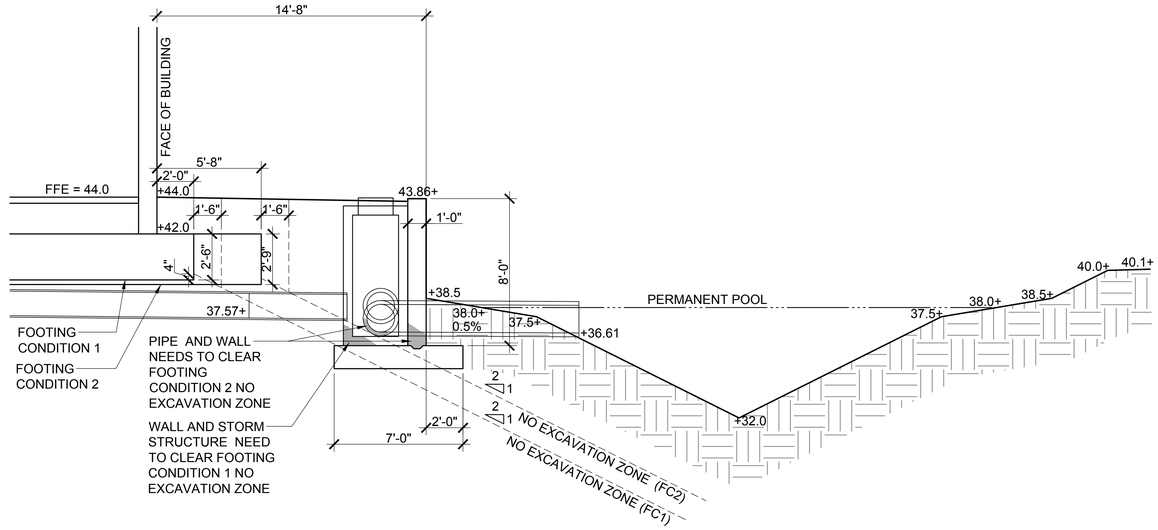

3 STORMWATER CONNECTION TO POND WITH SITE WALL NTS

NOTE:
CONTROL JOINTS SHALL BE 15' O.C. MAX., AND SHALL BE 2" IN DEPTH. EXPANSIONS JOINTS SHALL BE 45' O.C. MAX. AND SHALL EXTEND THE FULL DEPTH OF THE LEVEL SPREADER. THE MATERIAL SHALL BE PRE-MOLDED, ASPHALT IMPREGNATED, NON-EXTRUDING WITH A 1/2" THICKNESS.

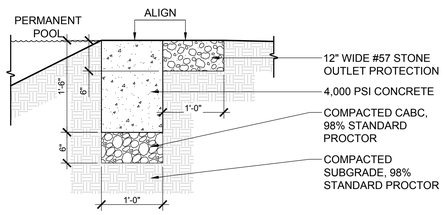

6 LEVEL SPREADER NTS

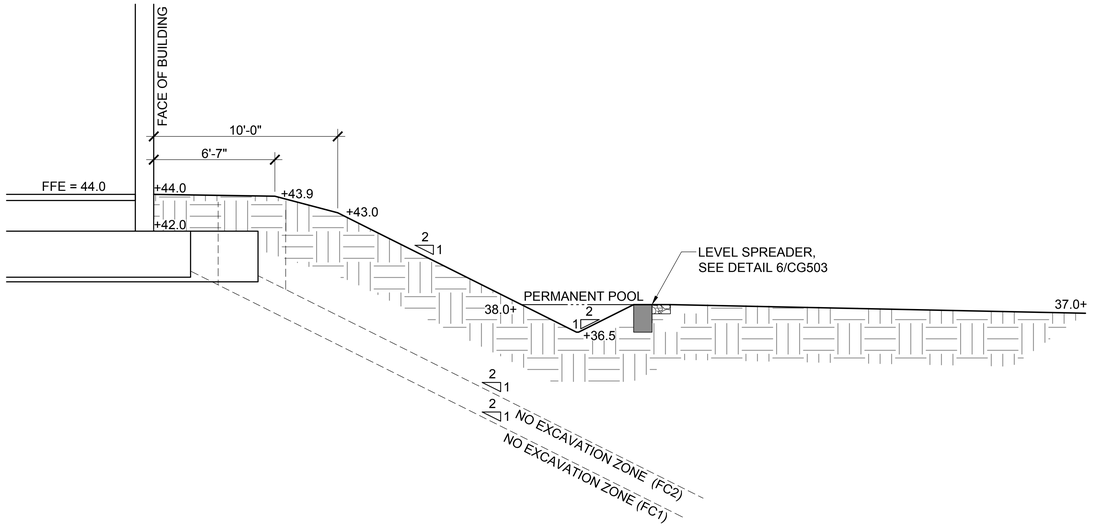

2 BLIND SWALE WITH LEVEL SPREADER OUTLET NTS

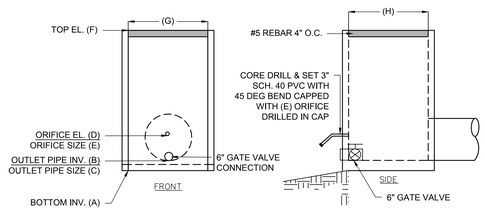

WET POND OUTLET STRUCTURE	
	WET POND 1
A	36.9 (EL. FT)
B	37.5 (EL. FT)
C	15 (IN)
D	38 (EL. FT)
E	1.25 (IN)
F	39.3 (EL. FT)
G	4.0 (FT)
H	4.0 (FT)

5 WET POND OUTLET STRUCTURE NTS

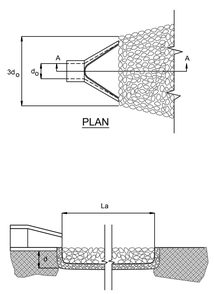

NOTES:
1. La IS THE LENGTH OF THE RIPRAP APRON.
2. d = 1.5 TIMES THE MAXIMUM STONE DIAMETER BUT NOT LESS THAN 6".
3. IN A WELL - DEFINED CHANNEL EXTEND THE APRONUP THE CHANNEL BANKS TO AN ELEVATION OF 6" ABOVE THE MAXIMUM TAILWATER DEPTH OR TO THE TOP OF THE BANK, WHICHEVER IS LESS.
4. A FILTER BLANKET OR FILTER FABRIC SHOULD BE INSTALLED BETWEEN THE RIPRAP AND SOIL FOUNDATION.

OUTLET PROTECTION	
OUTLET PIPE DIA.	24"
OUTLET FLOW RATE	3.80 CFS
OUTLET VELOCITY	5.22 FT/S
MATERIAL	CLASS A
LENGTH	8'
WIDTH	6'
STONE DIA.	3"
THICKNESS	9"

4 PIPE OUTLET PROTECTION NTS

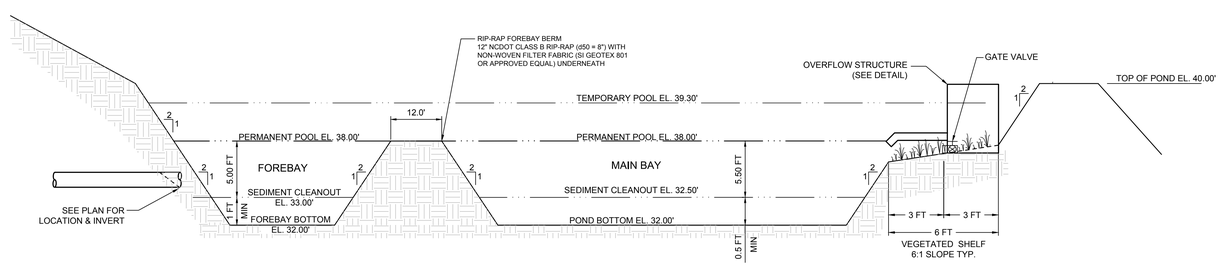

1 FOREBAY AND STORAGE POND SECTION NTS

UNCW
UNIVERSITY of NORTH CAROLINA WILMINGTON
601 S COLLEGE ROAD
WILMINGTON, NORTH CAROLINA 28403

PARKING DECK II AND SURFACE PARKING (DESIGN-BUILD)
SOUTH CAMPUS - 4965 RIEGEL ROAD

SCO ID NUMBER: 18-19226-01A
CODE: 441828
ITEM: 301

CONTRACTOR
Balfour Beatty Construction

DESIGNER

CLARKNEXSEN
1523 ELIZABETH AVENUE, SUITE 300
CHARLOTTE, NORTH CAROLINA 28204
704·377·8800
CLARK NEXSEN LICENSE NUMBER: C-1028

CONSULTANTS

WALKER CONSULTANTS
13860 Ballantyne Corporate Place
Suite 140
Charlotte, NC 28277
T: 704.247.6230
www.walkerconsultants.com
NC License No. F-0518

McKIM&CREED
CIVIL ENGINEER
243 NORTH FRONT STREET
WILMINGTON, NORTH CAROLINA
28401
910.343.1048

CORPORATE SEAL

PROFESSIONAL SEAL
NOT FOR CONSTRUCTION
NORTH CAROLINA PROFESSIONAL SEAL 22913 ENGINEER RICHARD M. COLLISON

SUBMITTAL
04/15/2019
CONSTRUCTION DOCUMENT SUBMITTAL 01

REVISIONS

KEY PLAN

SHEET
STORM DRAINAGE DETAILS

CG503

DESIGN: TRC
DRAWN: TRC
REVIEW: RMC

8/9/2018 4:16:18 PM
S:\49990016\90-Drawings\CG501_49990016.dwg

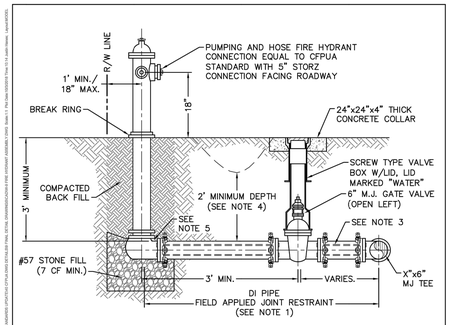

NOTES
1. JOINT RESTRAINT SYSTEMS SHALL BE WEDGE ACTION STYLE FOR DI.
2. WHEN HYDRANT LEGS REQUIRE FULL LENGTH PIPE SECTIONS, OVER BELL RESTRAINT SYSTEM SHALL HAVE 316 STAINLESS STEEL HARNESS AND FASTENERS.
3. CONTINUOUS 316 STAINLESS STEEL RODS (TEE TO VALVE AND VALVE TO HYDRANT) MAY BE USED WITH COR-BLUE MJ T-BOLT AND GASKET KITS, AS AN ALTERNATIVE.
4. HYDRANT AND VALVE SHALL BE PLACED OUTSIDE DITCH LIMITS.
5. WEEP HOLES OPEN AND UNBLOCKED TO DRAIN.
6. MJ TEE SHALL BE RESTRAINED ON EACH SIDE OF MAIN PLUS MAIN VALVES, FITTING, OR JOINTS WITHIN 10-FEET OF MJ TEE.
7. TRACING WIRE SHALL EXTEND ALONG HYDRANT LATERAL AND UP TO FINISHED GRADE WITH 2-FEET EXTENDED ABOVE THE BREAK RING OF HYDRANT.

DETAIL: FIRE HYDRANT ASSEMBLY	CAPE FEAR PUBLIC UTILITY AUTHORITY 235 GOVERNMENT CENTER DRIVE WILMINGTON, NC 28403 OFFICE: (910)332-6560	DETAIL NO: W-9
SCALE: NOT TO SCALE / CFPUA DETAIL DATE: 01/01/19	Stewardship. Sustainability. Service.	SHEET NO: -
CFPUA REV. No: 1		

6 FIRE HYDRANT ASSEMBLY NTS

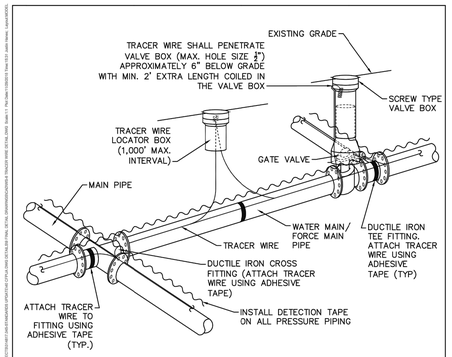

NOTES:
1. TRACER WIRE SHALL BE #10 COPPER SOLID CORE COPPER WIRE WITH GAS AND OIL RESISTANT INSULATION AND DIRECT BURY RATING.
2. WIRE SHALL BE STRAPPED TO ALL PVC PIPING WITH ADHESIVE TAPE AT 12 FOOT INTERVALS.
3. SECURE WIRE TO ALL TEE AND CROSS FITTINGS WITH ADHESIVE TAPE.
4. ALL SPLICES IN THE WIRE SHALL BE MADE WITH 3M DBR DIRECT BURY SPLICE KITS.

DETAIL: TRACER WIRE DETAIL	CAPE FEAR PUBLIC UTILITY AUTHORITY 235 GOVERNMENT CENTER DRIVE WILMINGTON, NC 28403 OFFICE: (910)332-6560	DETAIL NO: WS-6
SCALE: NOT TO SCALE / CFPUA DETAIL DATE: 01/01/19	Stewardship. Sustainability. Service.	SHEET NO: -
CFPUA REV. No: 1		

4 TRACER WIRE DETAIL NTS

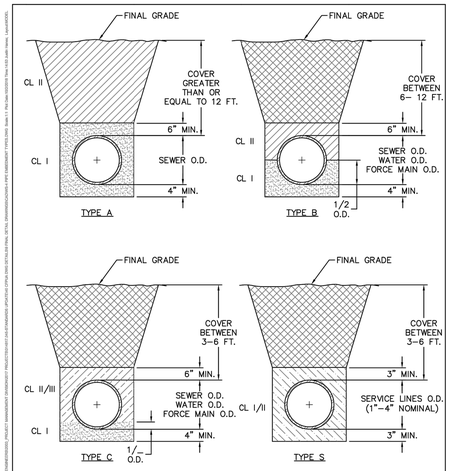

COMPACTION NOTES:
1. ALL ZONES: 95% STD EFFORT PER ASTM D698, EXCEPT AS STATED IN COMPACTION NOTE 2.
2. 12" SUBGRADE UNDER PAVEMENT: 98% STD EFFORT PER ASTM D698.

DETAIL: PIPE EMBEDMENT TYPES	CAPE FEAR PUBLIC UTILITY AUTHORITY 235 GOVERNMENT CENTER DRIVE WILMINGTON, NC 28403 OFFICE: (910)332-6560	DETAIL NO: WS-4
SCALE: NOT TO SCALE / CFPUA DETAIL DATE: 01/01/19	Stewardship. Sustainability. Service.	SHEET NO: -
CFPUA REV. No: 1		

2 PIPE EMBEDMENT TYPES NTS

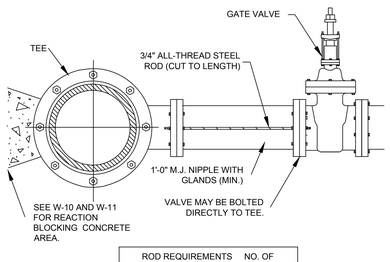

ROD REQUIREMENTS	NO. OF
RODS	BRANCH SIZE
4"	2
6"	2
8"	4
12"	4
16"	6
24"	6
30"	8
36"	8

NOTES: 1. STEEL RODS AND BOLTS SHALL BE 3/4" HOT DIPPED GALVANIZED. 2. SEE STANDARD THRUST BLOCK. TABLES W-10 AND W-11 FOR CONCRETE. 3. CONCRETE SHALL NOT CONTACT BOLTS OR ENDS OF MECHANICAL FITTINGS. 4. THIS RODDING REQUIREMENT DOES NOT APPLY TO FIRE HYDRANTS.

7 VALVE RESTRAINT AT TEES AND CROSSES FOR LINES (4"-24") NTS

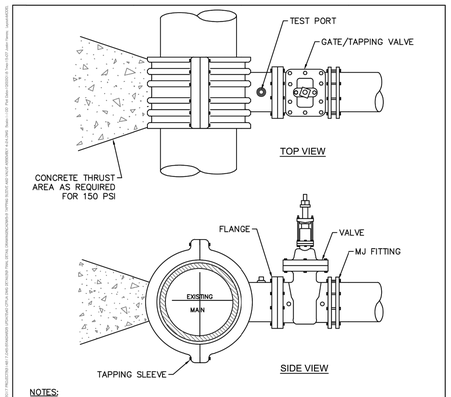

NOTES:
1. CONCRETE SHALL NOT CONTACT BOLTS OR ENDS OF MECHANICAL JOINT FITTINGS.
2. TEST PRESSURE SHALL NOT BE APPLIED FOR A MINIMUM OF 7 DAYS AFTER THRUST BLOCK PLACEMENT.
3. BRANCH SHALL NOT EQUAL RUN DIAMETER UNLESS APPROVED BY CFPUA ENGINEERING.
4. TAPPING SLEEVE & VALVE TO BE HYDROSTATICALLY TESTED AT 150 PSI FOR 15 MINUTES WITH ZERO PRESSURE LOSS.

DETAIL: TAPPING SLEEVE AND VALVE ASSEMBLY (4"-24")	CAPE FEAR PUBLIC UTILITY AUTHORITY 235 GOVERNMENT CENTER DRIVE WILMINGTON, NC 28403 OFFICE: (910)332-6560	DETAIL NO: WS-9
SCALE: NOT TO SCALE / CFPUA DETAIL DATE: 01/01/19	Stewardship. Sustainability. Service.	SHEET NO: -
CFPUA REV. No: 1		

5 TAPPING SLEEVE AND VALVE ASSEMBLY (4"-24") NTS

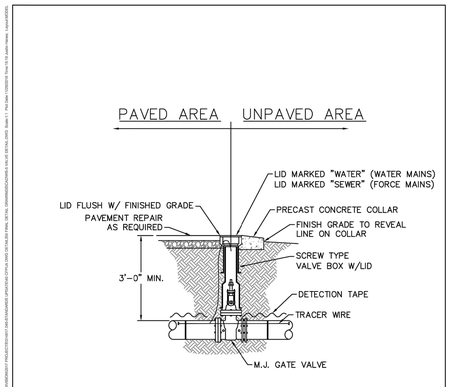

NOTES:
1. TRACER WIRE SHALL PENETRATE VALVE BOX THROUGH DRILLED HOLE APPROX. 6" BELOW GRADE WITH MINIMUM 2-FEET EXTRA LENGTH COILED IN THE VALVE BOX. SEE WS-6.

DETAIL: VALVE DETAIL	CAPE FEAR PUBLIC UTILITY AUTHORITY 235 GOVERNMENT CENTER DRIVE WILMINGTON, NC 28403 OFFICE: (910)332-6560	DETAIL NO: WS-5
SCALE: NOT TO SCALE / CFPUA DETAIL DATE: 01/01/19	Stewardship. Sustainability. Service.	SHEET NO: -
CFPUA REV. No: 1		

3 VALVE DETAIL NTS

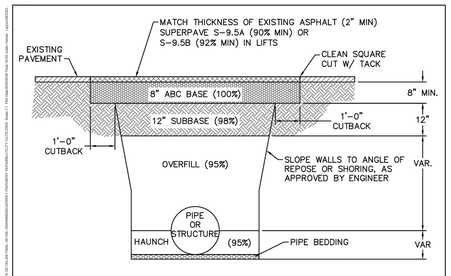

NOTES:
1. CONTRACTOR SHALL ENSURE BOTTOM OF TRENCH IS SUITABLE FOR INSTALLATION AND DOES NOT REQUIRE FOUNDATION CONDITIONING STONE.
2. FILL SHALL BE SUITABLE MATERIAL THAT IS FREE FROM HEAVY CLAY, GUMBOS, DEBRIS, ORGANICS AND LITTLE TO NO EXCESSIVE MOISTURE.
3. SELECT BACKFILL MAY BE SUBSTITUTED OR REQUIRED BY CITY TO ACHIEVE COMPACTION, (I.E. #57 STONE, ABC, CRUSHED LIMESTONE, CLEAN SAND, FLOWABLE FILL, ETC).
4. SOIL SHALL BE INSTALLED IN 6"-8" LIFTS AND COMPACTED BY A MECHANIZED TAMPER (I.E. JUMPING JACK). HOWEVER, VIBRATORY ROLLERS > 18" WIDTH MAY BE USED FOR LARGER EXCAVATIONS. THE PLATE TAMP METHOD SHALL NOT BE USED.
5. ALL APPROVED CASTINGS SHALL BE SET FLUSH TO GRADE AND SUPPORTED IF APPLICABLE.
6. COMPACT MATERIALS TO MINIMUM % DENSITY SHOWN IN DIAGRAM AS DETERMINED BY THE STANDARD PROCTOR METHOD ASTM D-698-A FOR SOILS, AND ASTM D-698-C FOR ABC STONE, AND BY NUCLEAR GAGE OR CORE SAMPLE FOR ASPHALT.
7. CUTBACKS OF ASPHALT SHALL BE PREPARED ON EDGE OF EXCAVATION OVER TOP OF UNDISTURBED SOIL.

(FOR PRIVATE ROADS AND PAVED AREAS; CONTRACTOR TO MEET MINIMUM REQUIREMENTS AS DEFINED BY RIGHT-OF-WAY OWNER FOR PUBLIC ROAD REPAIRS)

DETAIL: CITY OF WILMINGTON PAVEMENT REPAIRS-UTILITY CUTS	CAPE FEAR PUBLIC UTILITY AUTHORITY 235 GOVERNMENT CENTER DRIVE WILMINGTON, NC 28403 OFFICE: (910)332-6560	DETAIL NO: WS-1
SCALE: NOT TO SCALE / CFPUA DETAIL DATE: 01/01/19	Stewardship. Sustainability. Service.	SHEET NO: -
CFPUA REV. No: 1		

1 PAVEMENT REPAIRS-UTILITY CUTS NTS

UNCW
UNIVERSITY of NORTH CAROLINA WILMINGTON
601 S COLLEGE ROAD
WILMINGTON, NORTH CAROLINA 28403

PARKING DECK II AND SURFACE PARKING (DESIGN-BUILD)
SOUTH CAMPUS - 4965 RIEGEL ROAD

SCO ID NUMBER: 18-19226-01A
CODE: 441828
ITEM: 301

CONTRACTOR
Balfour Beatty Construction

DESIGNER

CLARKNEXSEN
1523 ELIZABETH AVENUE, SUITE 300
CHARLOTTE, NORTH CAROLINA 28204
704·377·8800
CLARK NEXSEN LICENSE NUMBER: C-1028

CONSULTANTS

WALKER CONSULTANTS
13860 Ballantyne Corporate Place
Suite 140
Charlotte, NC 28277
T: 704.247.6230
www.walkerconsultants.com
NC License No. F-0518

McKIM&CREED
CIVIL ENGINEER
243 NORTH FRONT STREET
WILMINGTON, NORTH CAROLINA
28401
910.343.1048

CORPORATE SEAL

PROFESSIONAL SEAL
NOT FOR CONSTRUCTION
NORTH CAROLINA PROFESSIONAL SEAL 22210 ENGINEER RICHARD M. COLLINS
04/15/2019

SUBMITTAL
CONSTRUCTION DOCUMENT SUBMITTAL 01

REVISIONS

KEY PLAN

SHEET
PUBLIC WATER DETAILS

CU501

DESIGN: TRC
DRAWN: TRC
REVIEW: RMC

8/9/2018 4:16:18 PM
S:\49990016\80\Drawings\CU501_49990016.dwg

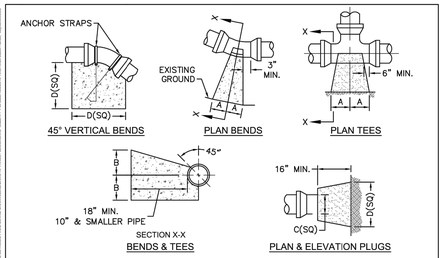

SIZE	90 BENDS A	90 BENDS B	45 BENDS A	45 BENDS B	22-1/2 BENDS A	22-1/2 BENDS B	TEES/PLUGS A	TEES/PLUGS B	45 VERT. BENDS
3"	8"	6"	5"	6"	3"	7"	6"	8"	27"
4"	8"	9"	5"	8"	3"	11"	6"	9"	28"
6"	14"	11"	9"	9"	8"	8"	12"	9"	36"
8"	16"	16"	12"	12"	10"	13"	14"	13"	42"
10"	18"	22"	15"	14"	14"	16"	18"	15"	50"
12"	20"	28"	18"	17"	16"	16"	22"	18"	62"
14"	26"	29"	21"	19"	18"	18"	26"	20"	72"
16"	33"	29"	25"	21"	20"	21"	32"	21"	83"
18"	40"	30"	28"	24"	22"	23"	36"	24"	88"

NOTES:
1. THRUST BLOCKING IS NOT PERMITTED EXCEPT IN SPECIAL INSTALLATIONS WHERE DESIGNED BY ENGINEER AND APPROVED BY CFPUA.
2. ALLOW 7-DAY MINIMUM CONCRETE CURE TIME BEFORE PLACING LOAD ON THRUST BLOCK
3. BASED ON 160 PSI TEST PRESSURE AND 2,000 PSF SOIL BEARING CAPACITY.
4. ALL BEARING SURFACES TO BE CARRIED TO UNDISTURBED GROUND.
5. PIPE & FITTINGS TO BE WRAPPED IN 10 MIL PLASTIC PRIOR TO THRUST BLOCK BEING POURED.

DETAIL: THRUST BLOCK
SCALE: NOT TO SCALE | CFPUA DETAIL DATE: 01/01/19
CFPUA REV. No: 1
CAPE FEAR PUBLIC UTILITY AUTHORITY
235 GOVERNMENT CENTER DRIVE
WILMINGTON, NC 28403
OFFICE: (910)332-6560
Stewardship. Sustainability. Service.
DETAIL NO: WS-13
SHEET NO: -

2 THRUST BLOCK NTS

CAPE FEAR PUBLIC UTILITY AUTHORITY STANDARD NOTES:

1. ALL PROPOSED ADDITIONS TO THE CAPE FEAR PUBLIC UTILITY AUTHORITY (CFPUA) WATER DISTRIBUTION AND SANITARY SEWER COLLECTION SYSTEMS, AS SHOWN AND SPECIFIED HEREIN, SHALL BE DESIGNED AND CONSTRUCTED TO CONFORM TO STATE RULES AND THE CFPUA'S MINIMUM TECHNICAL STANDARDS. THE CFPUA MINIMUM TECHNICAL STANDARDS ARE CONTAINED IN THE CURRENT DESIGN GUIDANCE MANUAL, MATERIAL SPECIFICATION MANUAL, TECHNICAL SPECIFICATIONS FOR CONSTRUCTION, AND STANDARD DRAWING DETAILS.
2. SEWER GUARDS REQUIRED AT ALL MANHOLES. STAINLESS STEEL SEWER GUARDS REQUIRED AT MANHOLES LOCATED IN TRAFFIC AREAS.
3. WATER AND SEWER SERVICES SHALL BE PERPENDICULAR TO MAIN AND TERMINATE 18" INSIDE RIGHT-OF-WAY LINE. SEWER SERVICES IN CUL-DE-SACS ARE REQUIRED TO BE PERPENDICULAR, OR MUST ORIGINATE IN END OF LINE MANHOLE AND TERMINATE 18" INSIDE RIGHT-OF-WAY LINE.
4. ALL SEWER SERVICES CONNECTING INTO DUCTILE IRON MAINS SHALL ALSO BE CONSTRUCTED OF DIP.
5. MINIMUM 10' UTILITIES EASEMENT PROVIDED ALONG THE FRONTAGE OF ALL LOTS AND AS SHOWN FOR NEW DEVELOPMENTS.
6. NO FLEXIBLE COUPLINGS SHALL BE USED.
7. ALL STAINLESS STEEL FASTENERS SHALL BE TYPE 316.
8. CLEANOUTS SHALL BE LOCATED A MINIMUM OF 12 FEET FROM ALL PROPERTY CORNERS.
9. WATER METER BOXES ARE TO BE A MINIMUM OF 5 FEET FROM THE PROPERTY CORNER.
10. UNUSED SERVICES SHALL BE ABANDONED. ABANDONED WATER SERVICES SHALL BE DISCONNECTED FROM MAIN.
11. A MINIMUM OF 10' OF MAIN LINE SHALL BE REPLACED FOR NEW CONNECTIONS TO EXISTING CLAY GRAVITY SEWER MAINS.

DETAIL: STANDARD NOTES (REQUIRED ON ALL PLAN AND PROFILE SHEETS)
SCALE: NOT TO SCALE | CFPUA DETAIL DATE: 01/02/19
CFPUA REV. No: 2
CAPE FEAR PUBLIC UTILITY AUTHORITY
235 GOVERNMENT CENTER DRIVE
WILMINGTON, NC 28403
OFFICE: (910)332-6560
Stewardship. Sustainability. Service.
DETAIL NO: WS-14
SHEET NO: -

3 STANDARD NOTES NTS

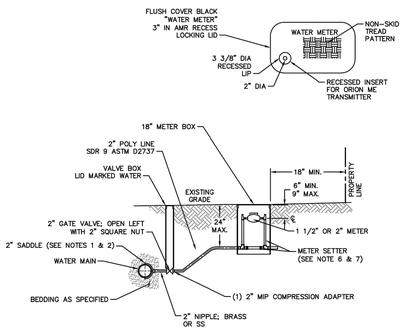

NOTES:
1. WATER SERVICES SHALL BE INSTALLED PERPENDICULAR TO MAIN AND TERMINATE 18" INSIDE THE RIGHT-OF-WAY LINE.
2. SERVICE SADDLES ON PVC MAINS SHALL BE WIDE BAND BRASS BODY.
3. METER BOXES SUSCEPTIBLE TO TRAFFIC SHALL CONFORM TO ASTM A48, CLASS 30B AND AASHTO H20 LOAD RATING STANDARDS.
4. NON-TRAFFIC METER BOXES SHALL BE PER CFPUA STANDARD MATERIAL.
5. 3" CLEAN FILL REQUIRED ALL AROUND 2" POLY SERVICE LINE.
6. 1 1/2" METER - NL METER SETTER SHALL BE PER CFPUA STANDARD MATERIAL.
7. 2" METER - NL METER SETTER SHALL BE PER CFPUA STANDARD MATERIAL.
8. WATER METER BOXES ARE TO BE A MINIMUM OF 5 FEET FROM THE PROPERTY CORNERS.
9. SERVICE PIPING AND METER SETTER TO BE CENTERED IN THE METER BOX.

DETAIL: COMMERCIAL WATER SERVICE - 1 1/2 OR 2-INCH METERS
SCALE: NOT TO SCALE | CFPUA DETAIL DATE: 01/01/19
CFPUA REV. No: 1
CAPE FEAR PUBLIC UTILITY AUTHORITY
235 GOVERNMENT CENTER DRIVE
WILMINGTON, NC 28403
OFFICE: (910)332-6560
Stewardship. Sustainability. Service.
DETAIL NO: W-3
SHEET NO: -

1 COMMERCIAL WATER SERVICE- 1 1/2 OR 2-INCH METERS NTS

UNIVERSITY of NORTH CAROLINA WILMINGTON
601 S COLLEGE ROAD
WILMINGTON, NORTH CAROLINA 28403

PARKING DECK II AND SURFACE PARKING (DESIGN-BUILD)
SOUTH CAMPUS - 4965 RIEGEL ROAD

SCO ID NUMBER: 18-19226-01A
CODE: 441828
ITEM: 301

CONTRACTOR
Balfour Beatty Construction

DESIGNER

CLARKNEXSEN
1523 ELIZABETH AVENUE, SUITE 300
CHARLOTTE, NORTH CAROLINA 28204
704·377·8800
CLARK NEXSEN LICENSE NUMBER: C-1028

CONSULTANTS

WALKER CONSULTANTS
13860 Ballantyne Corporate Place
Suite 140
Charlotte, NC 28277
T: 704.247.6230
www.walkerconsultants.com
NC License No. F-0518

McKIM&CREED
CIVIL ENGINEER
243 NORTH FRONT STREET
WILMINGTON, NORTH CAROLINA
28401
910.343.1048

CORPORATE SEAL

PROFESSIONAL SEAL
NORTH CAROLINA PROFESSIONAL SEAL 22931 ENGINEER RICHARD M COLLINSON

SUBMITTAL
04/15/2019
CONSTRUCTION DOCUMENT SUBMITTAL 01

REVISIONS

KEY PLAN

SHEET
PUBLIC WATER DETAILS

CU502

DESIGN: TRC
DRAWN: TRC
REVIEW: RMC

8/9/2018 4:16:18 PM
S:\499\001618\0-Drawings\CU501_49990016.dwg